Metal Shed

OWNER'S MANUAL /
Instructions for Assembly RITA

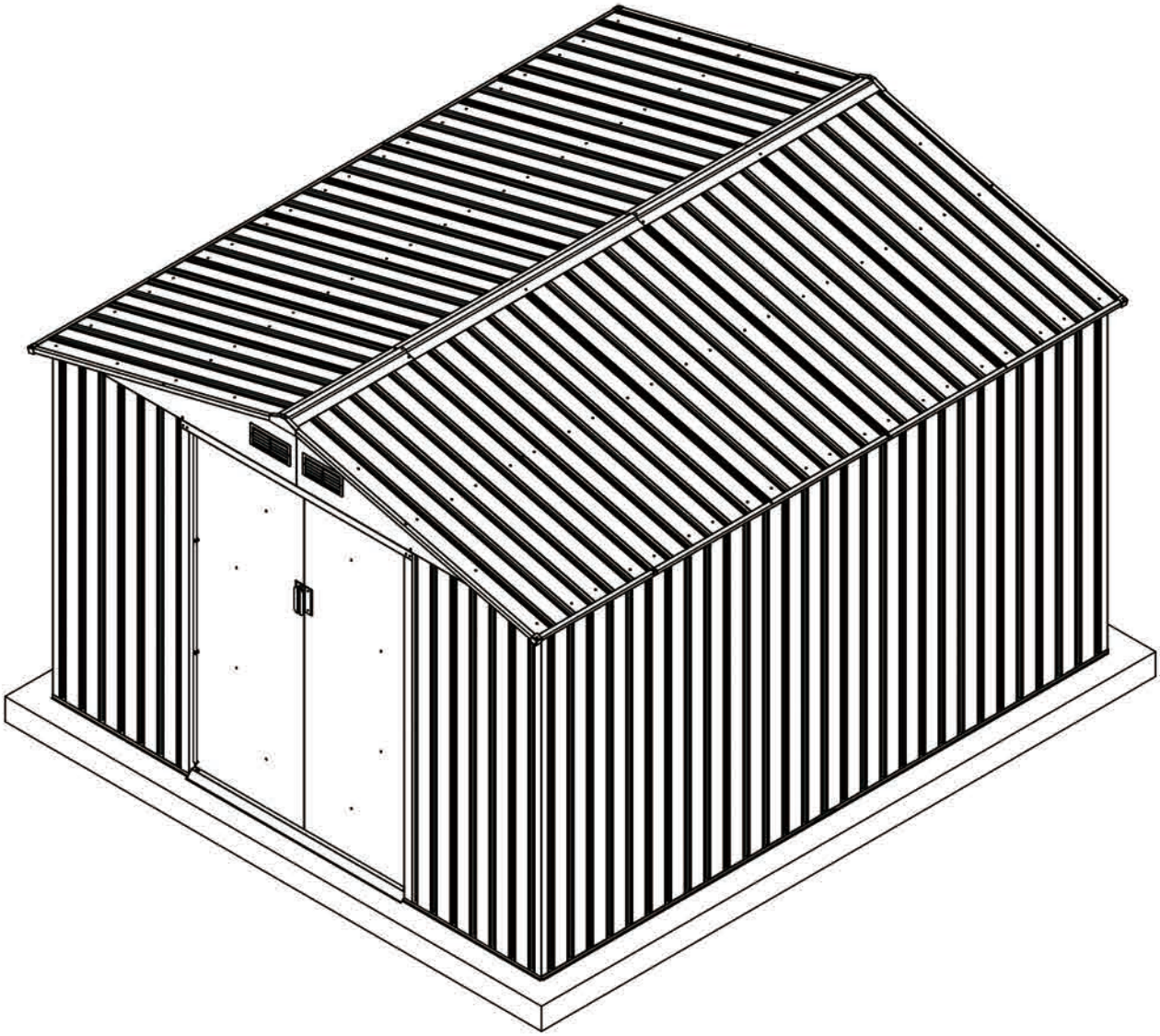

Requires two people and takes 3-4 hours for Installation.

Size of RITA:

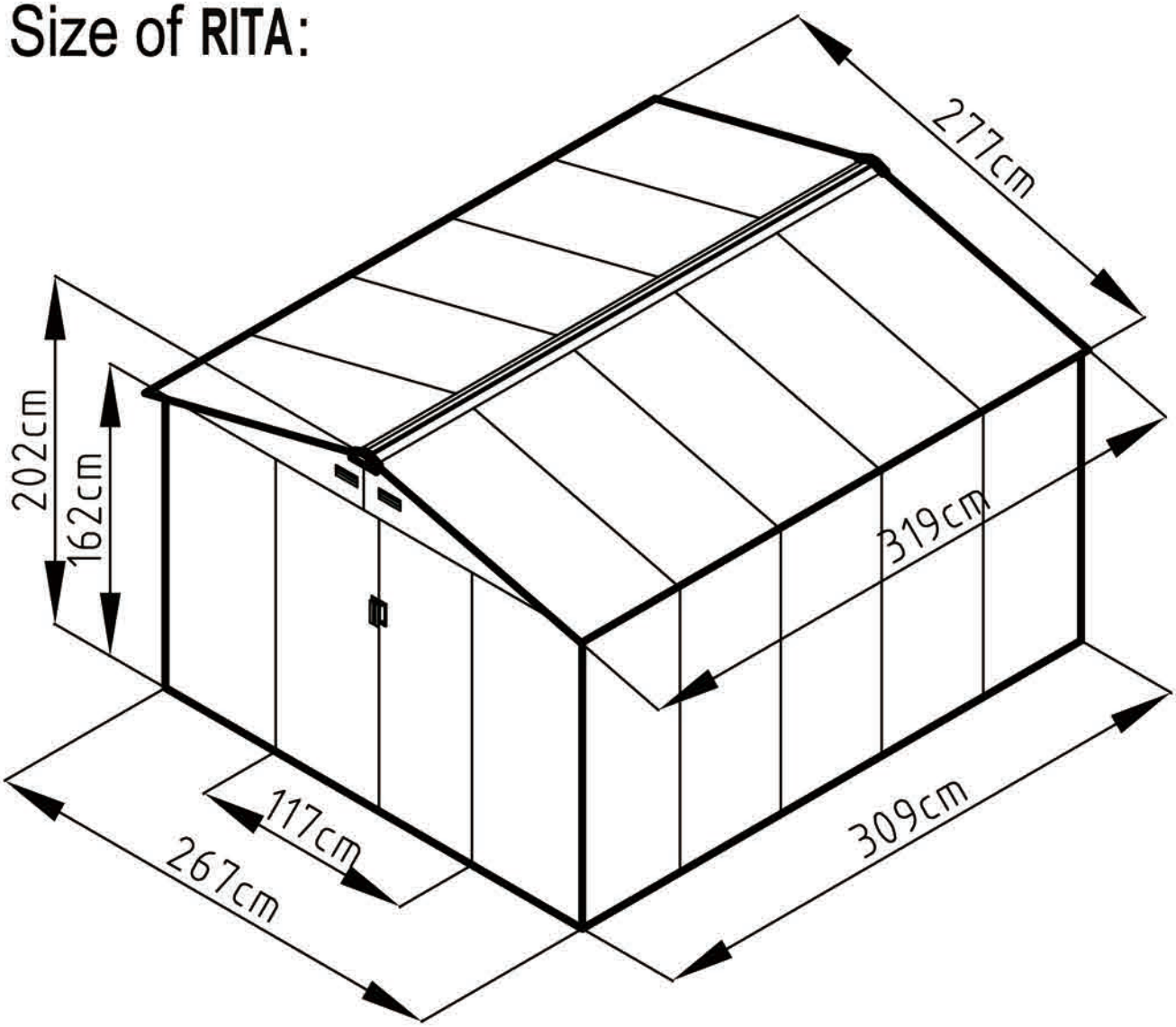

Area of installation requirement:

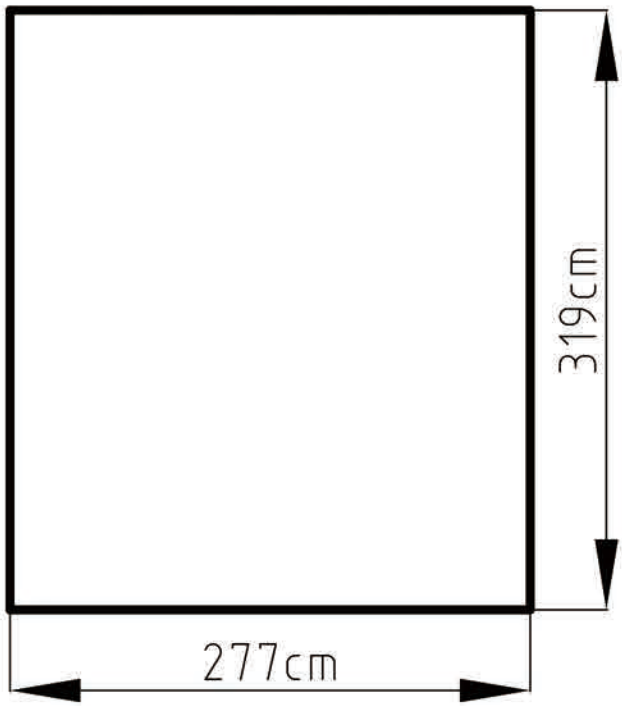

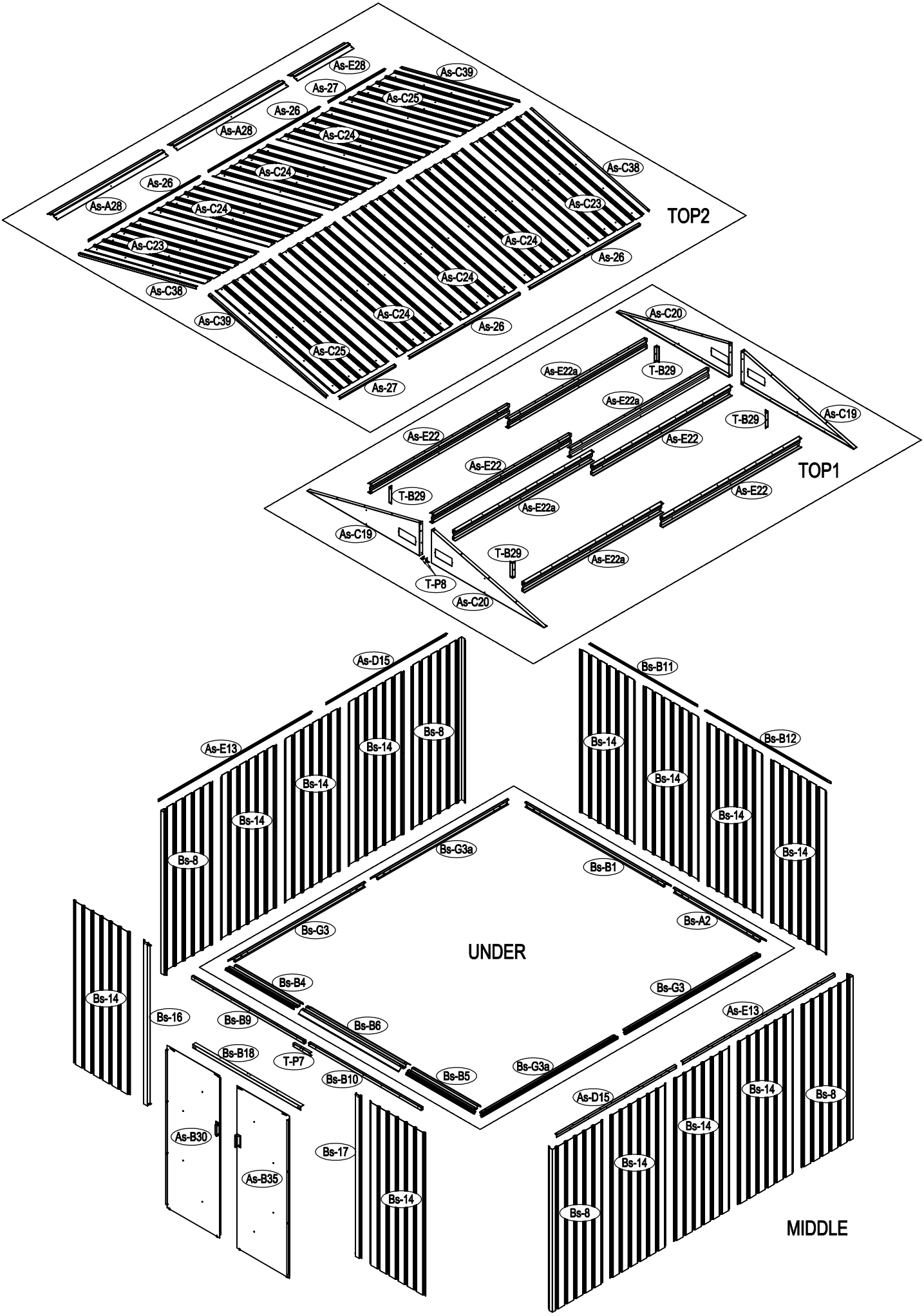
TOP2
As-E28
As-C39
As-27
As-C25
As-26
As-A28
As-C24
As-C38
As-C23
As-C20
TOP1
As-E22a
T-B29
As-C19
As-E22
T-P8
UNDER
As-D15
Bs-B11
Bs-B12
Bs-8
Bs-14
As-E13
Bs-G3a
Bs-B1
Bs-A2
Bs-G3
Bs-B4
Bs-B6
Bs-B5
Bs-16
Bs-B9
Bs-B18
T-P7
Bs-B10
As-B30
As-B35
Bs-17
MIDDLE

NO.	IMAGE	mm	QTY
UNDER			
Bs-B1		1693	x1
Bs-A2		1074	x1
Bs-G3		1593	x2
Bs-G3a		1600	x2
Bs-B4		803	x1
Bs-B5		803	x1
Bs-B6		1170	x1
MIDDLE			
Bs-8		1648	x4
Bs-14		1648	x12
Bs-B9		1315	x1
Bs-B10		1315	x1
Bs-B11		1249	x1
Bs-B12		1453	x1
As-E13		1784	x2
As-D15		1401	x2
Bs-16		1648	x1
Bs-17		1648	x1
Bs-B18		1257	x1
TOP1			
As-C19		1315.3	x2
As-C20		1315.3	x2
As-E22		1625.5	x4
As-E22a		1625.5	x4
T-B29		160	x4
TOP2			
As-C23		1420	x2
As-C24		1420	x6
As-C25		1420	x2
As-26		1296	x4
As-27		657	x2
As-C38		1418	x2
As-C39		1418	x2
As-A28		1298	x2

NO.	IMAGE	mm	QTY
As-E28		659	x1
DOOR			
As-B30		1643	x1
As-B35		1643	x1
Ts-31		1583	x2
Bs-B32		978	x4
Bs-B33		593	x1
Bs-B34		593	x1
Bs-B36		593	x1
Bs-B37		593	x1
ANNEX			
T-P1			x4
T-P2			x4
T-P3			x4
T-P4			x2
TP5A			x4
T-P6			x2
T-P7		200	x1
T-P8			x2
As-E40			x289
As-E41		ST4X10	x318
As-E42		ST4X16	x25
As-E43		M4X10	x105
As-E44			x111

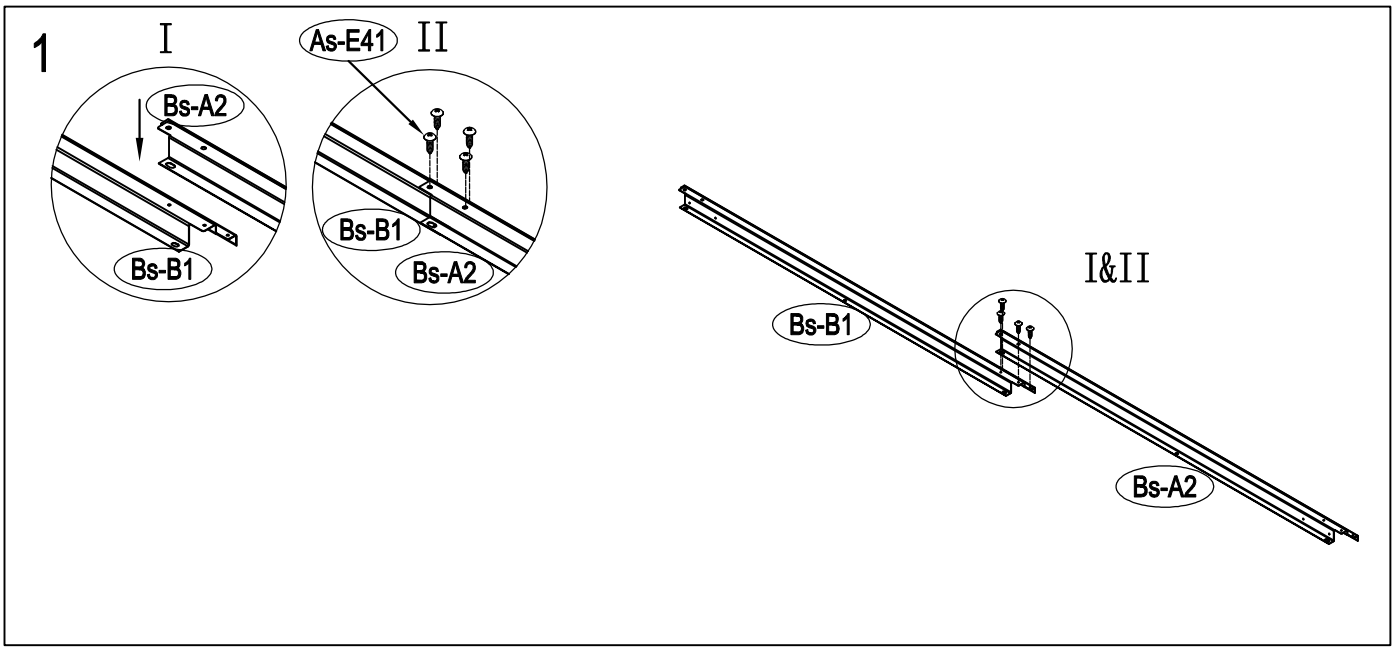
1
I
Bs-A2
Bs-B1
As-E41
II
Bs-B1
Bs-A2
I&II
Bs-B1
Bs-A2

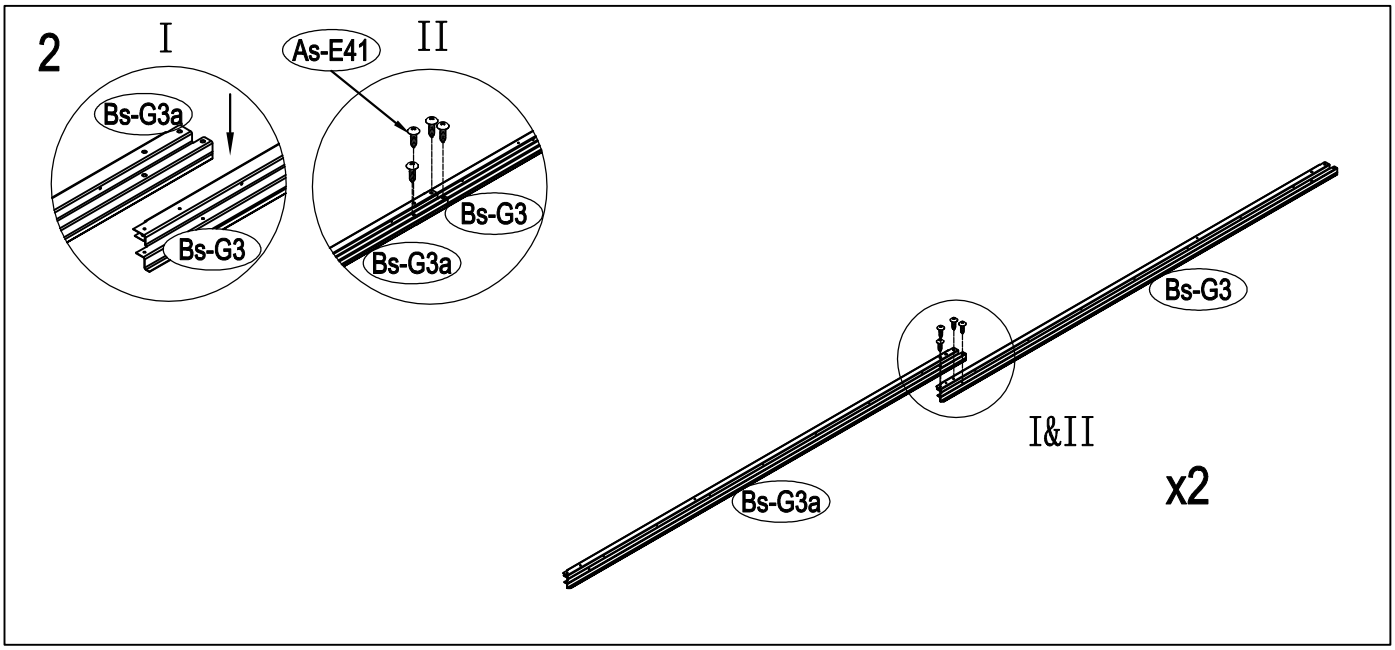
2
I
Bs-G3a
Bs-G3
As-E41
II
Bs-G3
Bs-G3a
Bs-G3
I&II
x2
Bs-G3a

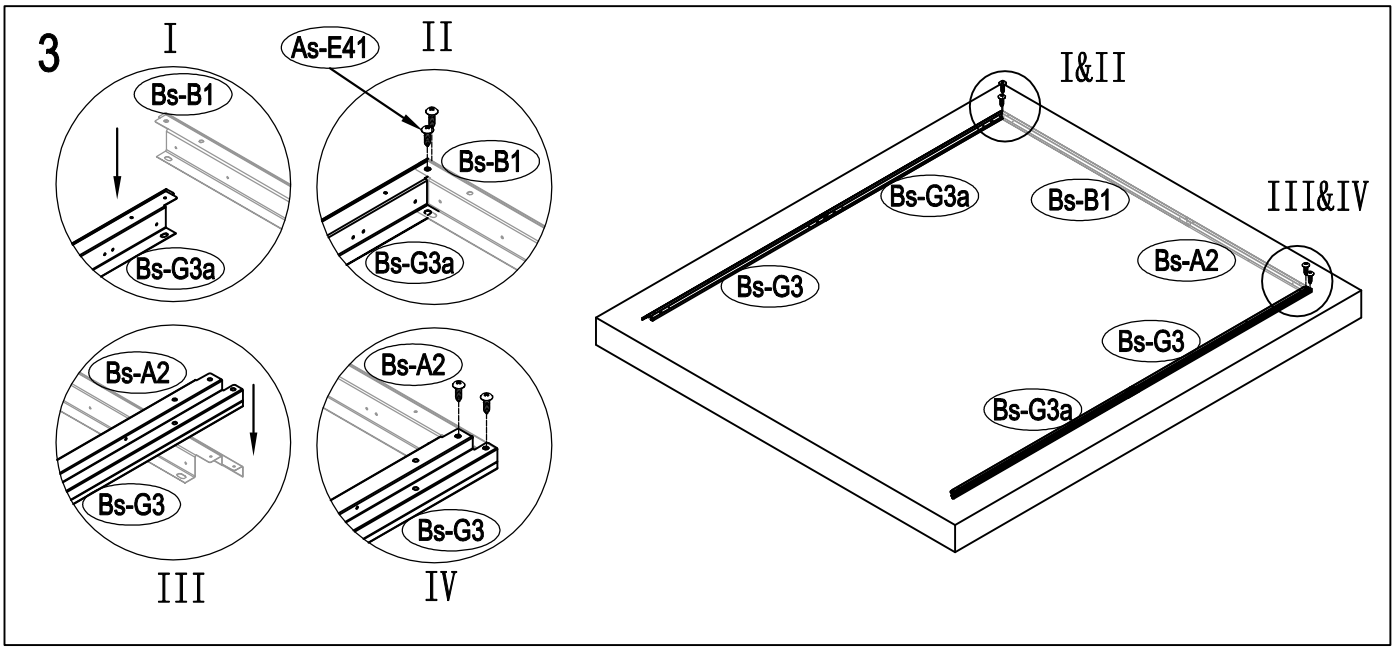
3
I
Bs-B1
Bs-G3a
As-E41
II
Bs-B1
Bs-G3a
Bs-A2
Bs-G3
III
Bs-A2
Bs-G3
IV
I&II
Bs-G3a
Bs-B1
III&IV
Bs-A2
Bs-G3
Bs-G3
Bs-G3a

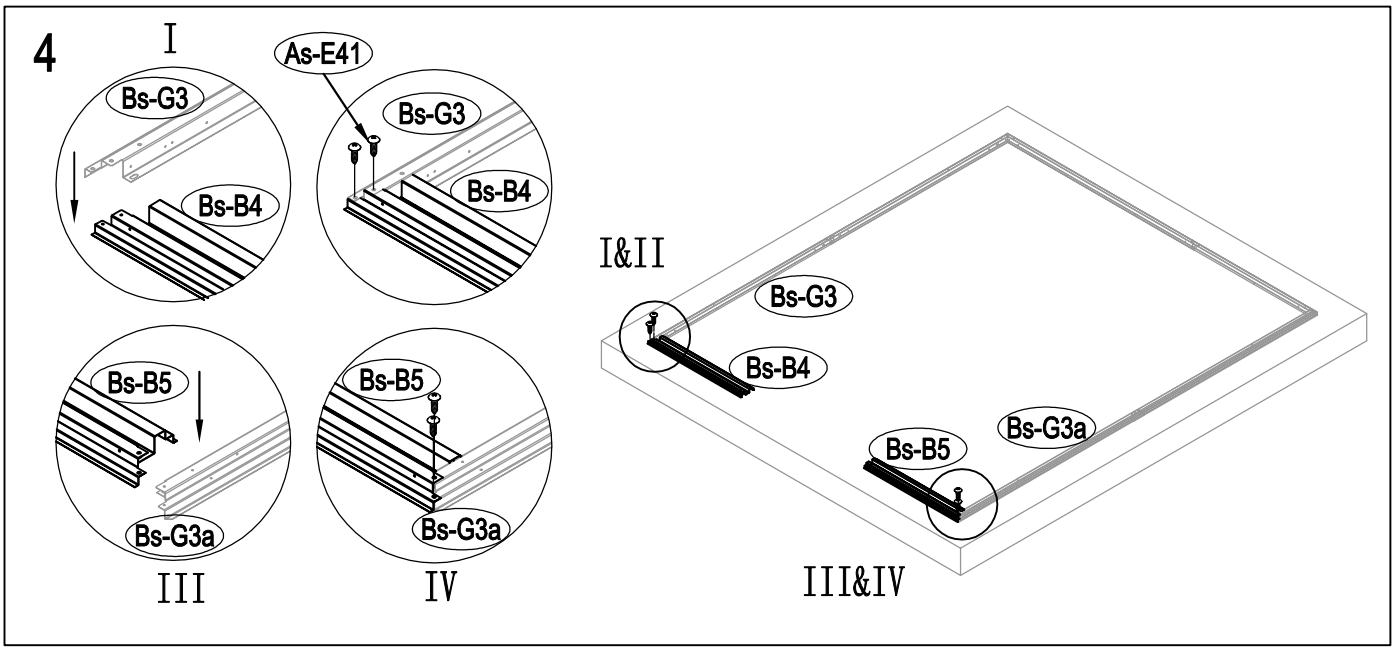
4
I
Bs-G3
Bs-B4
As-E41
Bs-G3
Bs-B4
Bs-B5
Bs-G3a
III
Bs-B5
Bs-G3a
IV
I&II
Bs-G3
Bs-B4
Bs-B5
Bs-G3a
III&IV

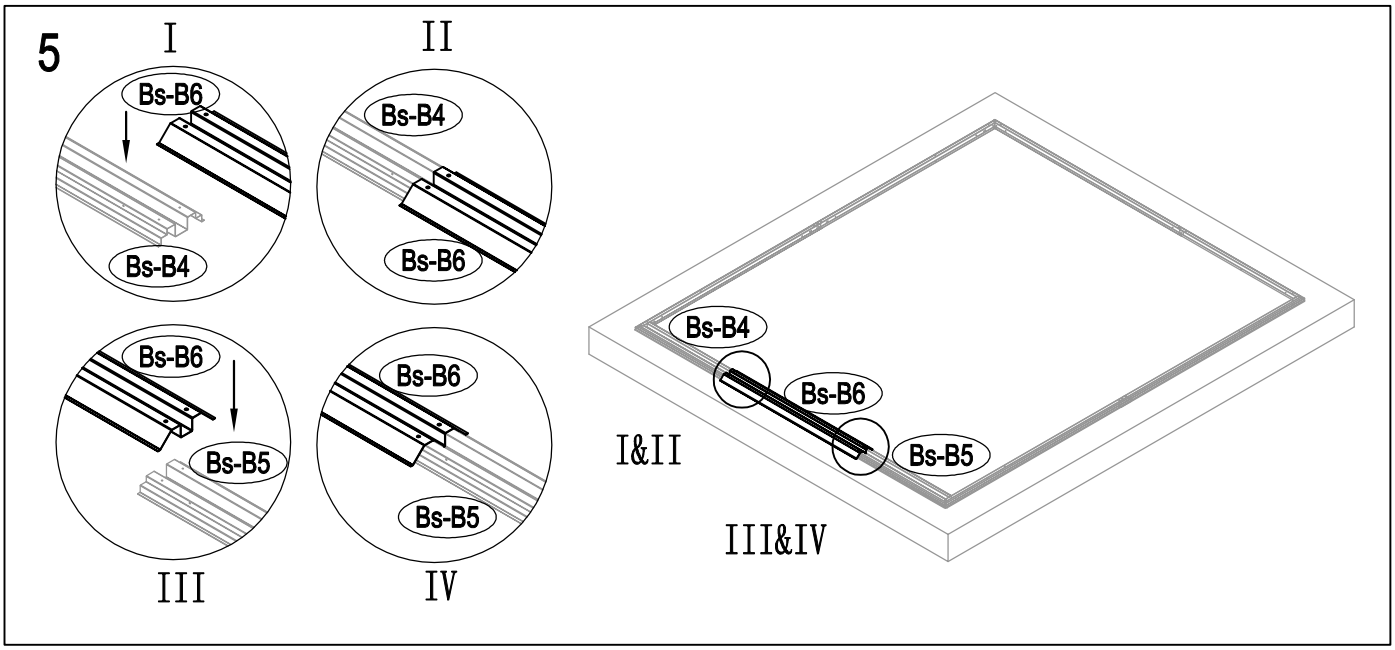
5
I
Bs-B6
Bs-B4
II
Bs-B4
Bs-B6
Bs-B6
Bs-B5
III
Bs-B6
Bs-B5
IV
Bs-B4
Bs-B6
Bs-B5
I&II
III&IV

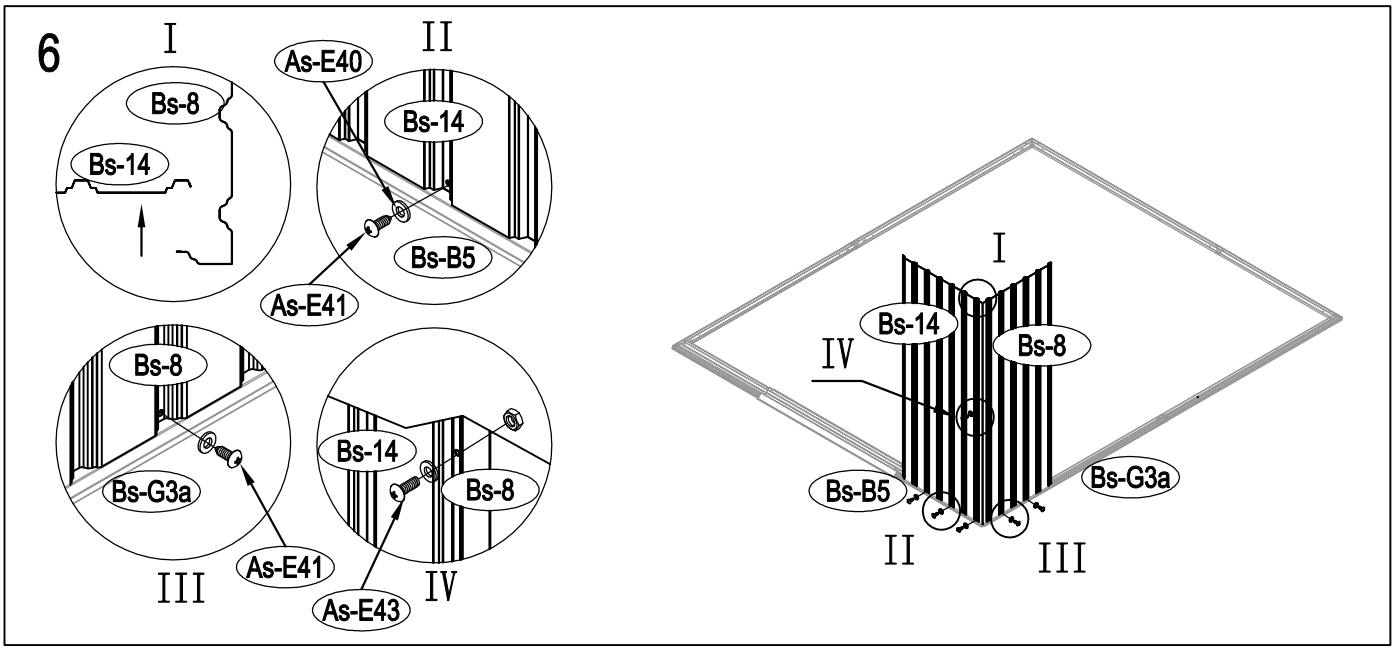
6
I
Bs-8
Bs-14
II
As-E40
Bs-14
Bs-B5
As-E41
Bs-8
Bs-G3a
As-E41
III
Bs-14
Bs-8
As-E43
IV
I
Bs-14
Bs-8
IV
Bs-B5
Bs-G3a
II
III

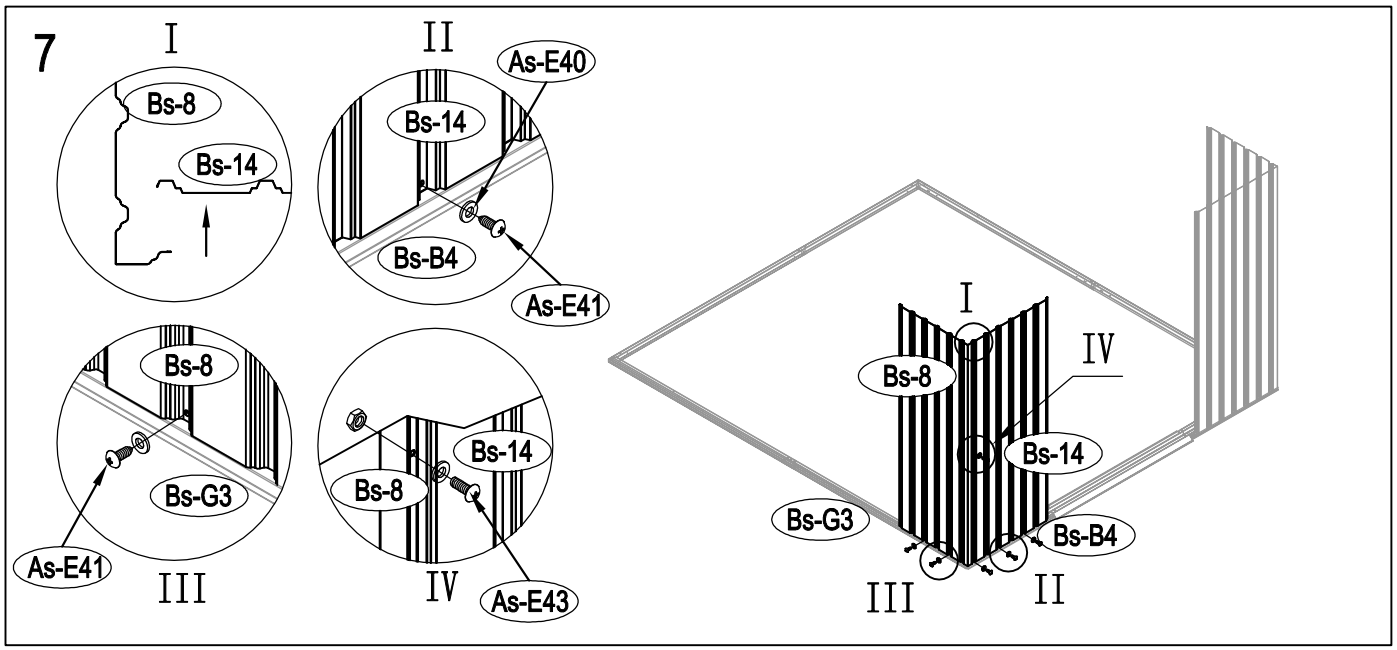
7
I
Bs-8
Bs-14
II
As-E40
Bs-14
Bs-B4
As-E41
Bs-8
Bs-G3
As-E41
III
Bs-14
Bs-8
As-E43
IV
I
IV
Bs-8
Bs-14
Bs-G3
Bs-B4
III
II

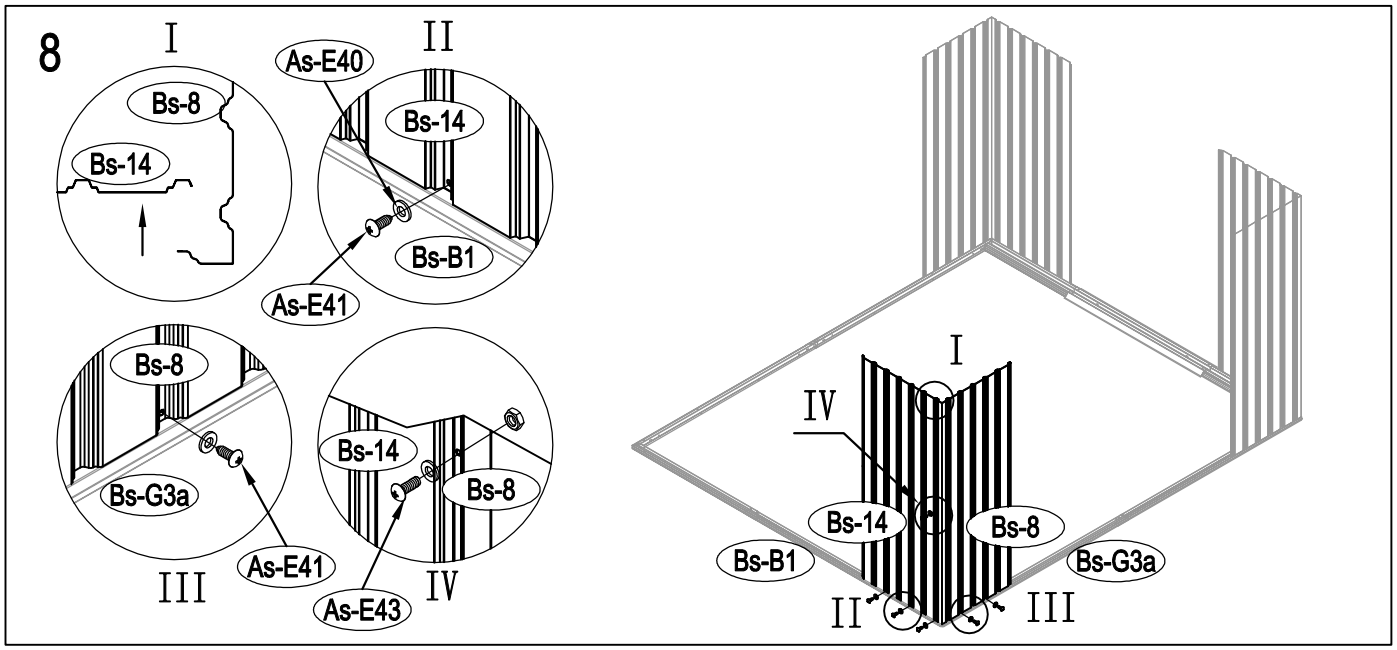
8
I
Bs-8
Bs-14
II
As-E40
Bs-14
Bs-B1
As-E41
Bs-8
Bs-G3a
As-E41
III
Bs-14
Bs-8
As-E43
IV
I
IV
Bs-14
Bs-8
Bs-B1
Bs-G3a
II
III

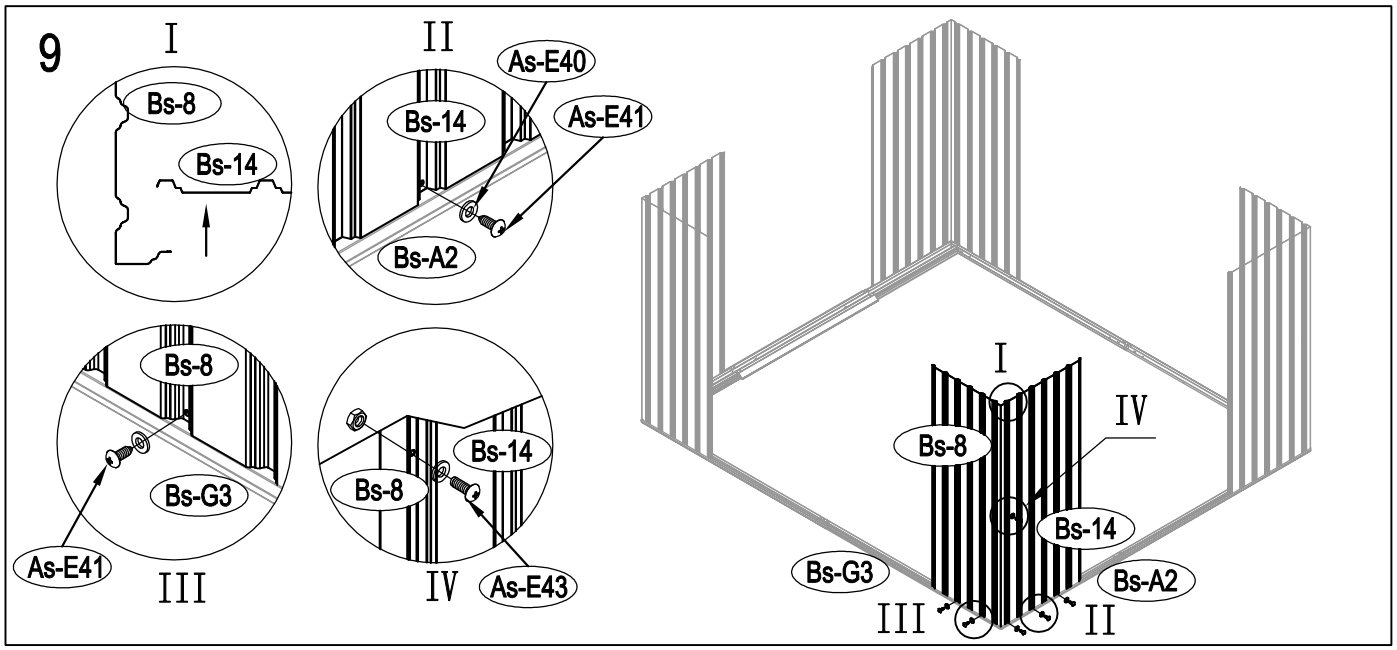
9
I
Bs-8
Bs-14
II
As-E40
Bs-14
As-E41
Bs-A2
Bs-8
Bs-G3
As-E41
III
Bs-14
Bs-8
As-E43
IV
I
IV
Bs-8
Bs-14
Bs-G3
Bs-A2
III
II

10

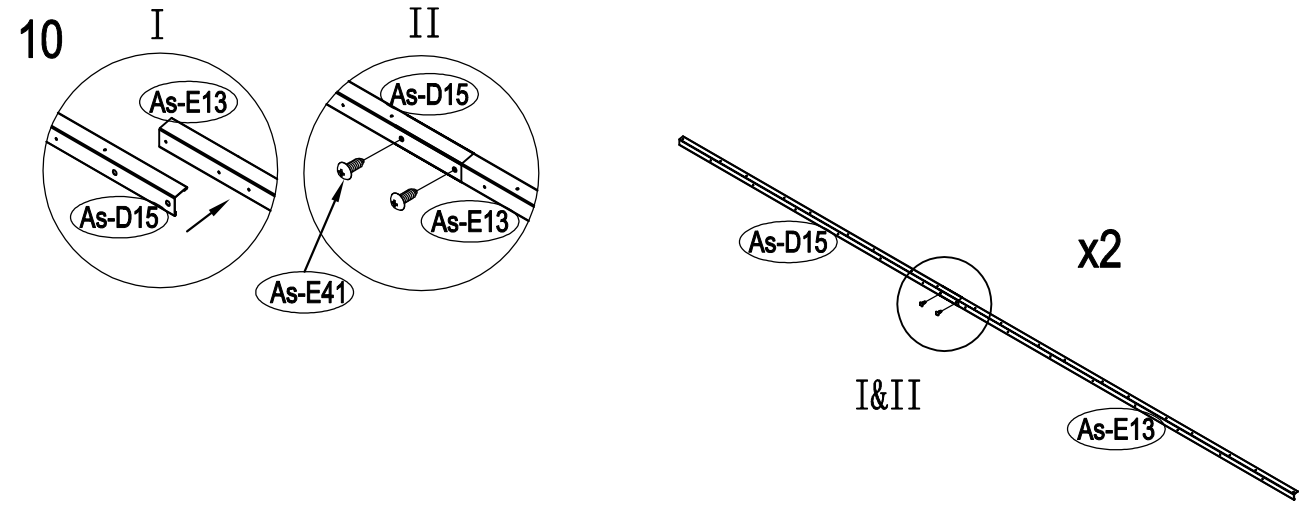
I
II
As-E13
As-D15
As-D15
As-E13
As-E41
As-D15
x2
I&II
As-E13

11

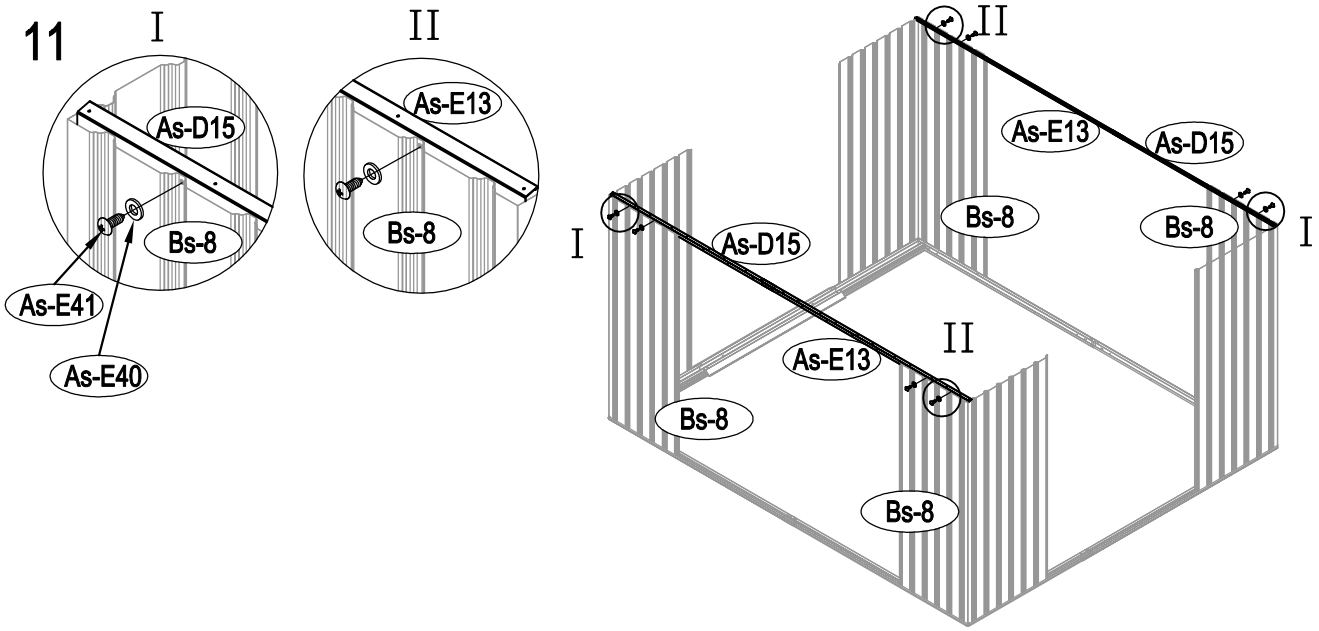
I
II
As-D15
Bs-8
As-E41
As-E40
As-E13
Bs-8
II
As-E13
As-D15
Bs-8
Bs-8
I
I
As-D15
II
As-E13
Bs-8
Bs-8

12

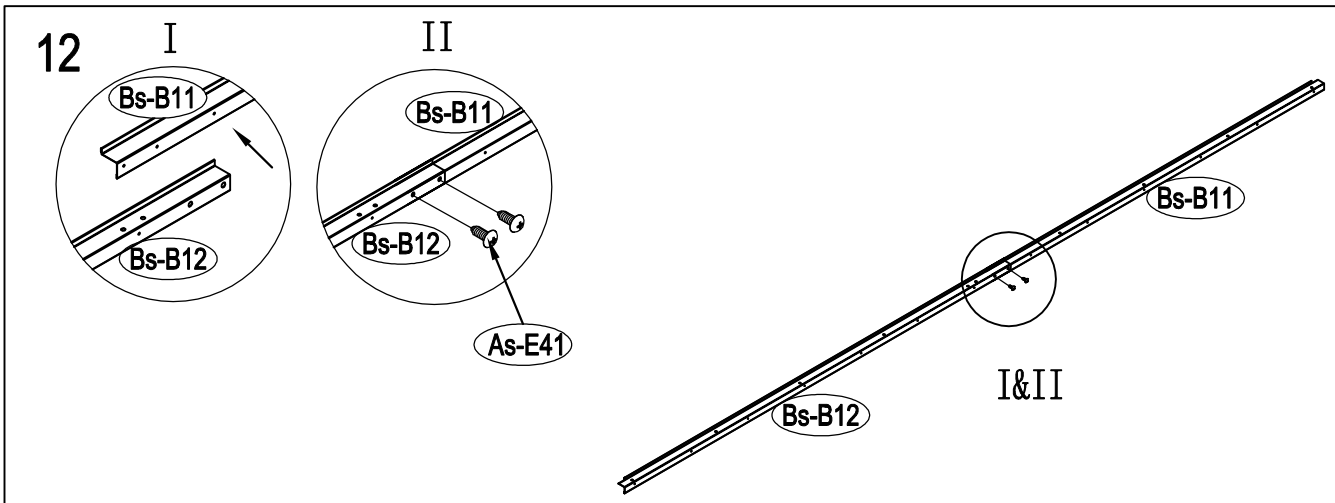
I
II
Bs-B11
Bs-B12
Bs-B11
Bs-B12
As-E41
Bs-B11
I&II
Bs-B12

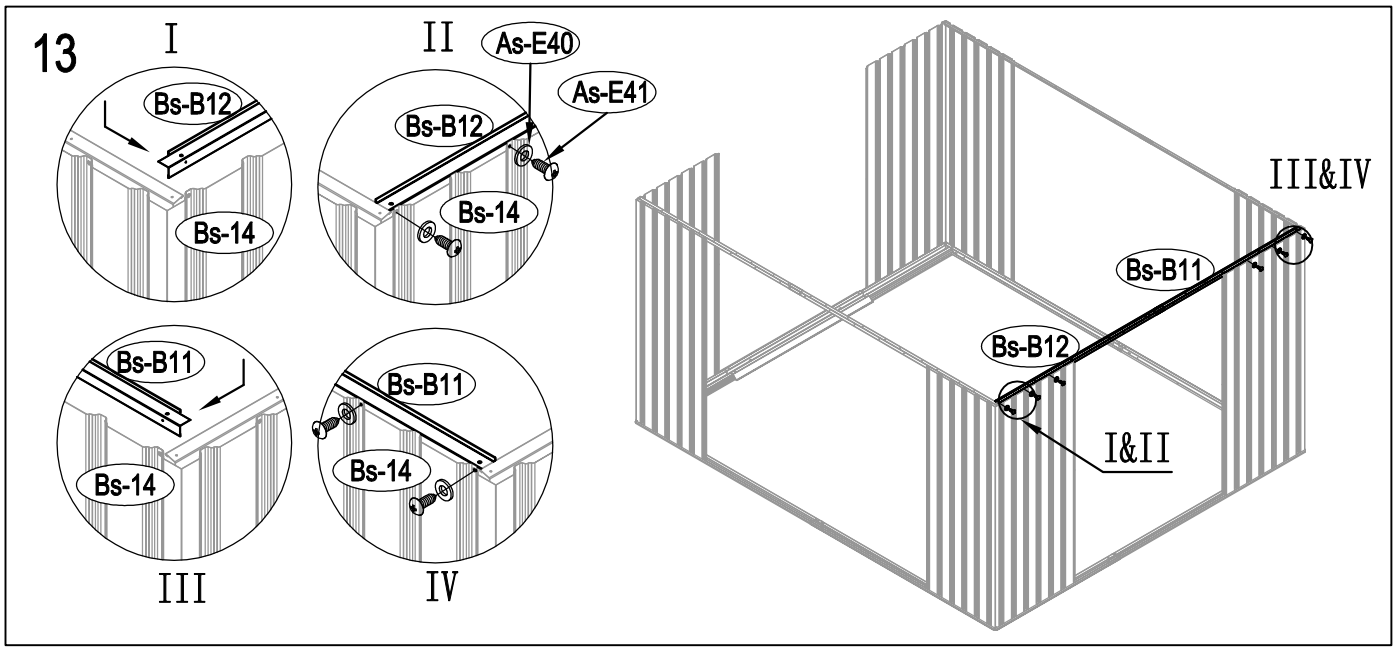
13
I
Bs-B12
Bs-14
II
As-E40
As-E41
Bs-B12
Bs-14
III
Bs-B11
Bs-14
IV
Bs-B11
Bs-14
III&IV
Bs-B11
Bs-B12
I&II

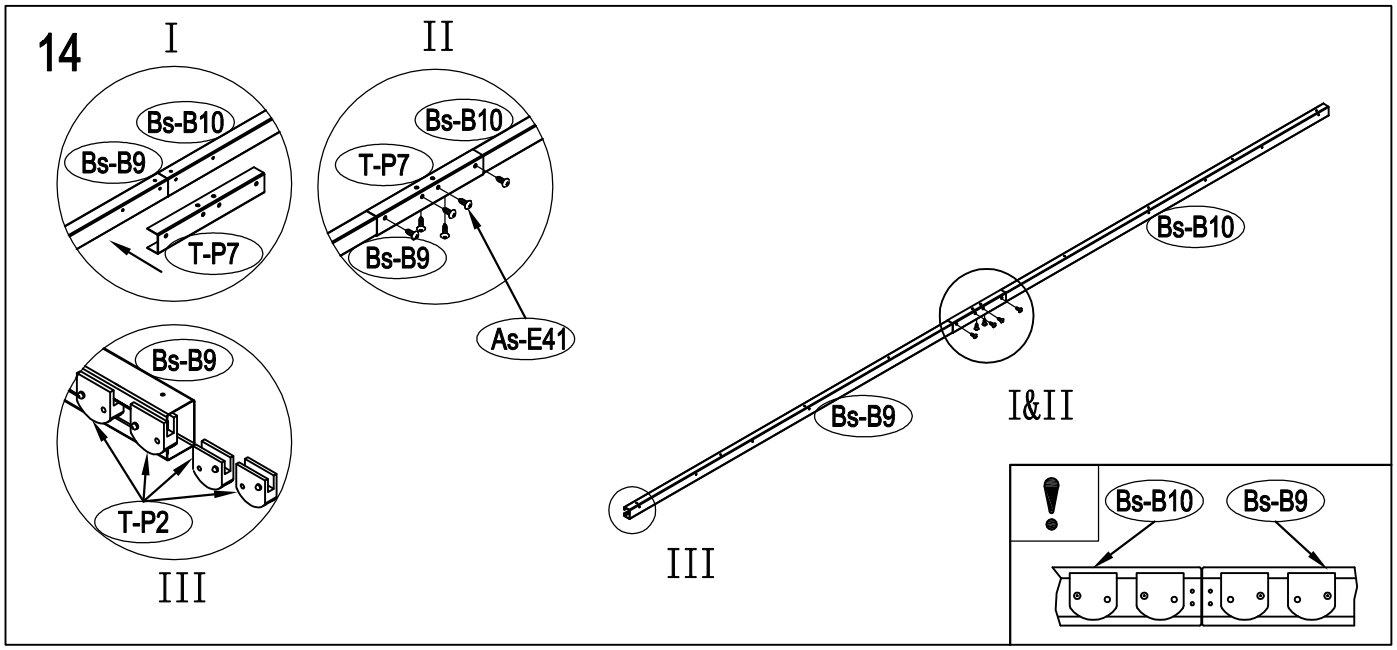
14
I
Bs-B10
Bs-B9
T-P7
II
Bs-B10
T-P7
Bs-B9
As-E41
Bs-B9
T-P2
III
Bs-B10
I&II
Bs-B9
III
Bs-B10
Bs-B9

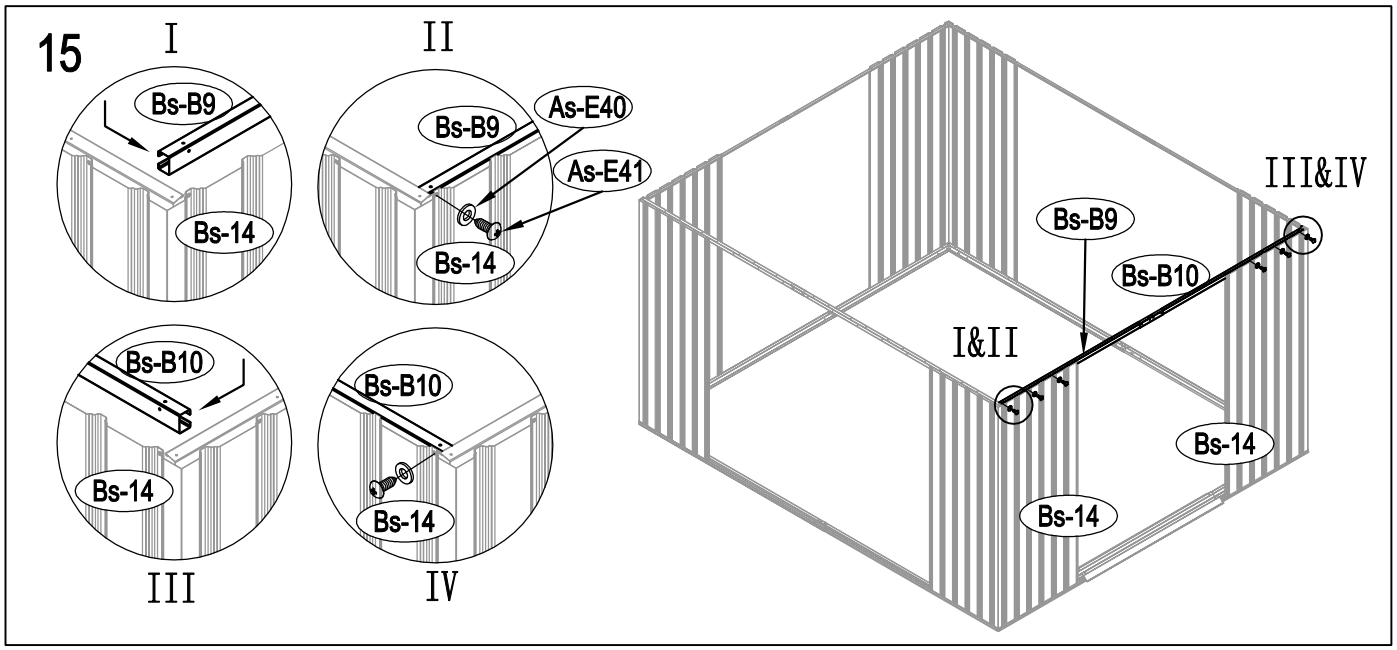
15
I
Bs-B9
Bs-14
II
As-E40
Bs-B9
As-E41
Bs-14
Bs-B10
Bs-14
III
Bs-B10
Bs-14
IV
III&IV
Bs-B9
Bs-B10
I&II
Bs-14
Bs-14

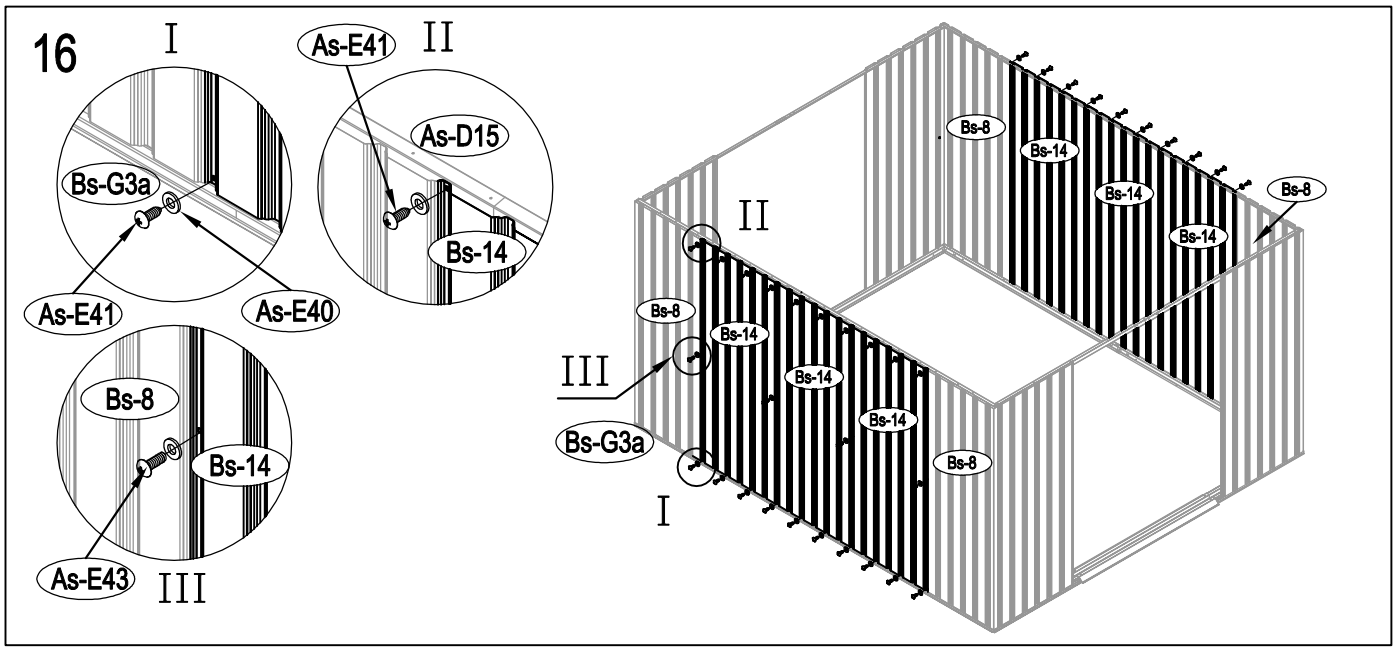
16
I
As-E41
II
As-D15
Bs-G3a
Bs-14
As-E41
As-E40
Bs-8
Bs-14
As-E43
III
Bs-8
Bs-14
Bs-14
Bs-14
Bs-14
Bs-8
Bs-8
Bs-14
Bs-14
Bs-14
Bs-8
II
III
Bs-G3a
I

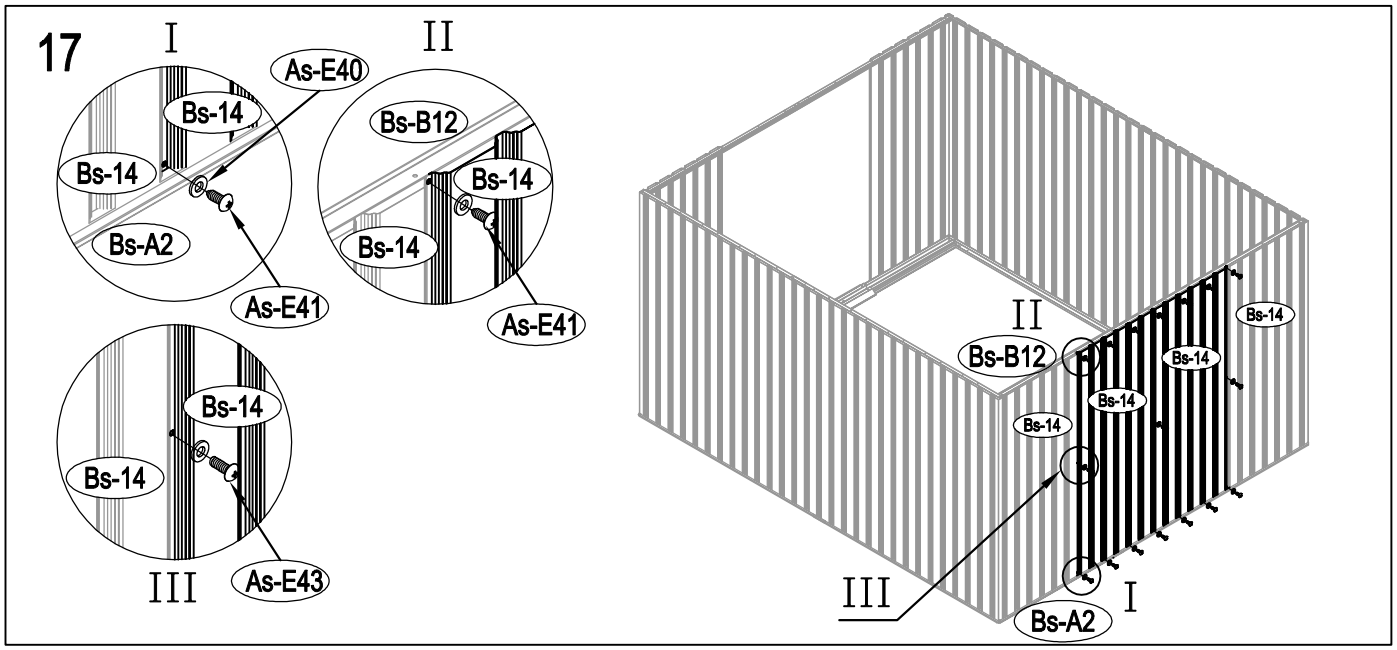
17
I
As-E40
II
Bs-14
Bs-B12
Bs-14
Bs-14
Bs-14
Bs-A2
As-E41
As-E41
Bs-14
Bs-14
III
As-E43
II
Bs-B12
Bs-14
Bs-14
Bs-14
Bs-14
III
I
Bs-A2

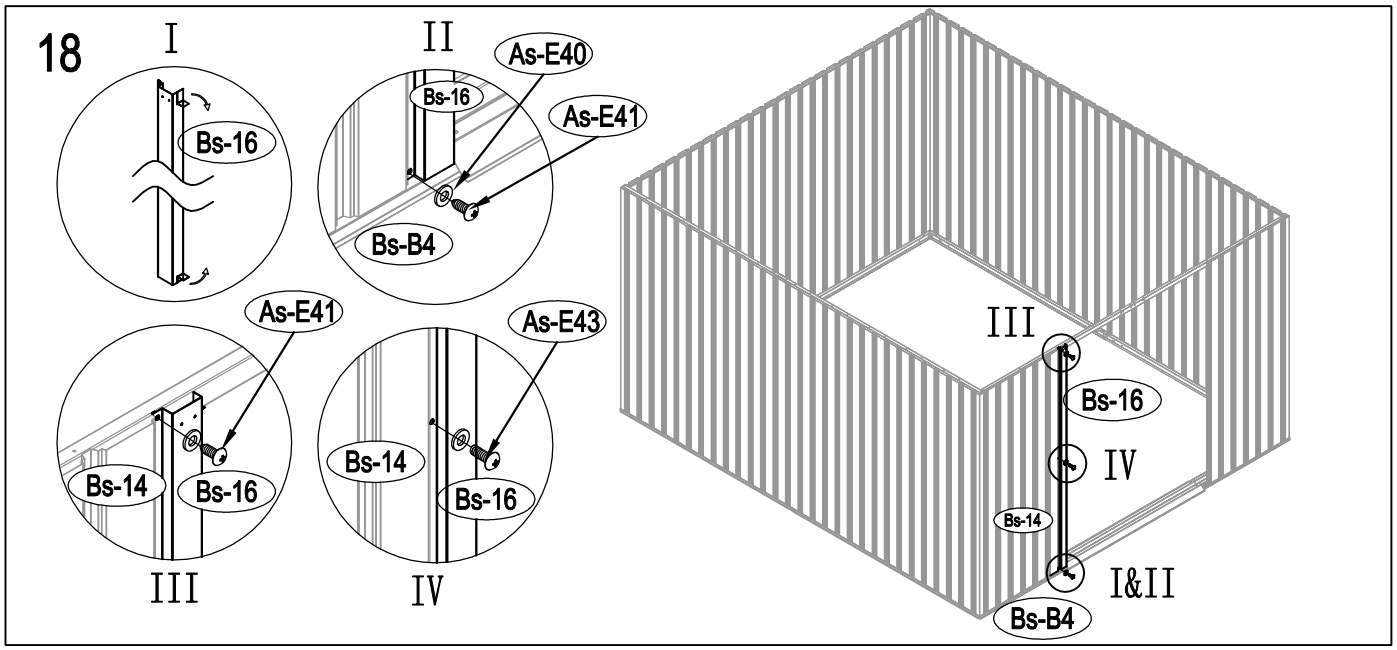
18
I
Bs-16
II
As-E40
Bs-16
As-E41
Bs-B4
As-E41
Bs-14
Bs-16
III
As-E43
Bs-14
Bs-16
IV
III
Bs-16
IV
Bs-14
I&II
Bs-B4

19

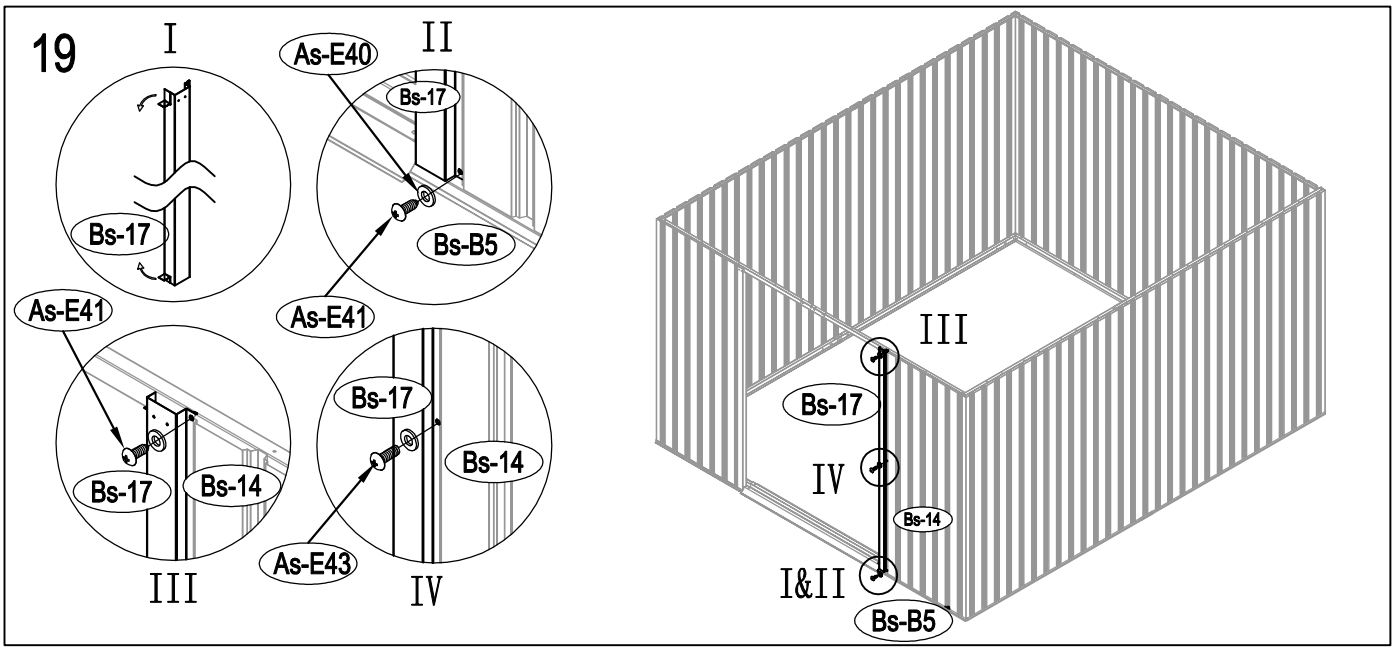
I
Bs-17
II
As-E40
Bs-17
Bs-B5
As-E41
As-E41
Bs-17
Bs-14
III
Bs-17
Bs-14
As-E43
IV
III
Bs-17
IV
Bs-14
I&II
Bs-B5

20

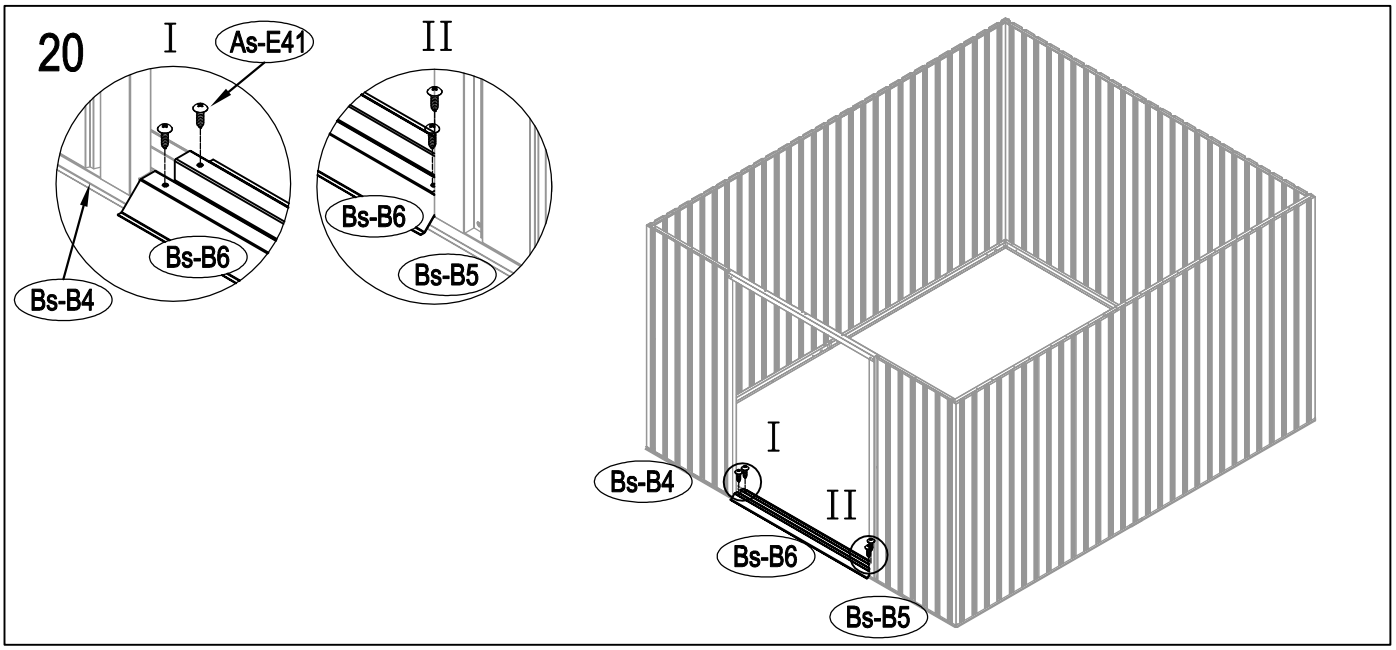
I
As-E41
Bs-B6
Bs-B4
II
Bs-B6
Bs-B5
I
Bs-B4
II
Bs-B6
Bs-B5

21

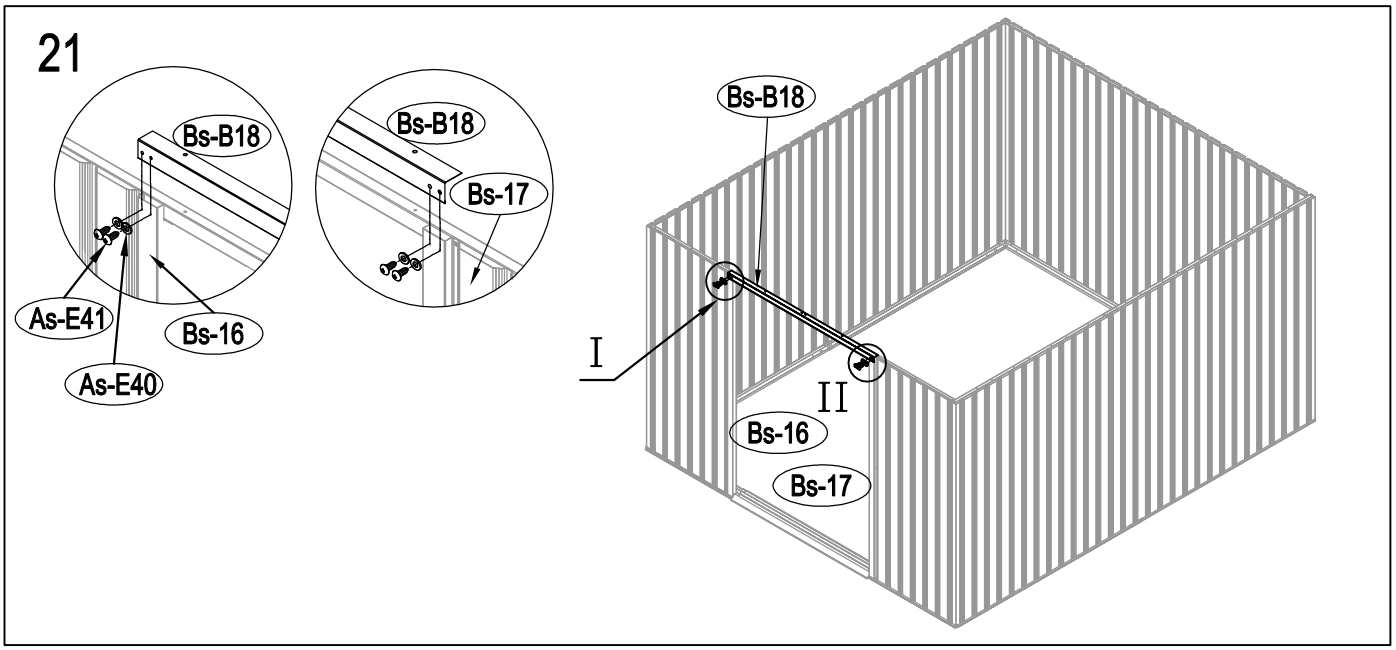
Bs-B18
As-E41
Bs-16
As-E40
Bs-B18
Bs-17
Bs-B18
I
II
Bs-16
Bs-17

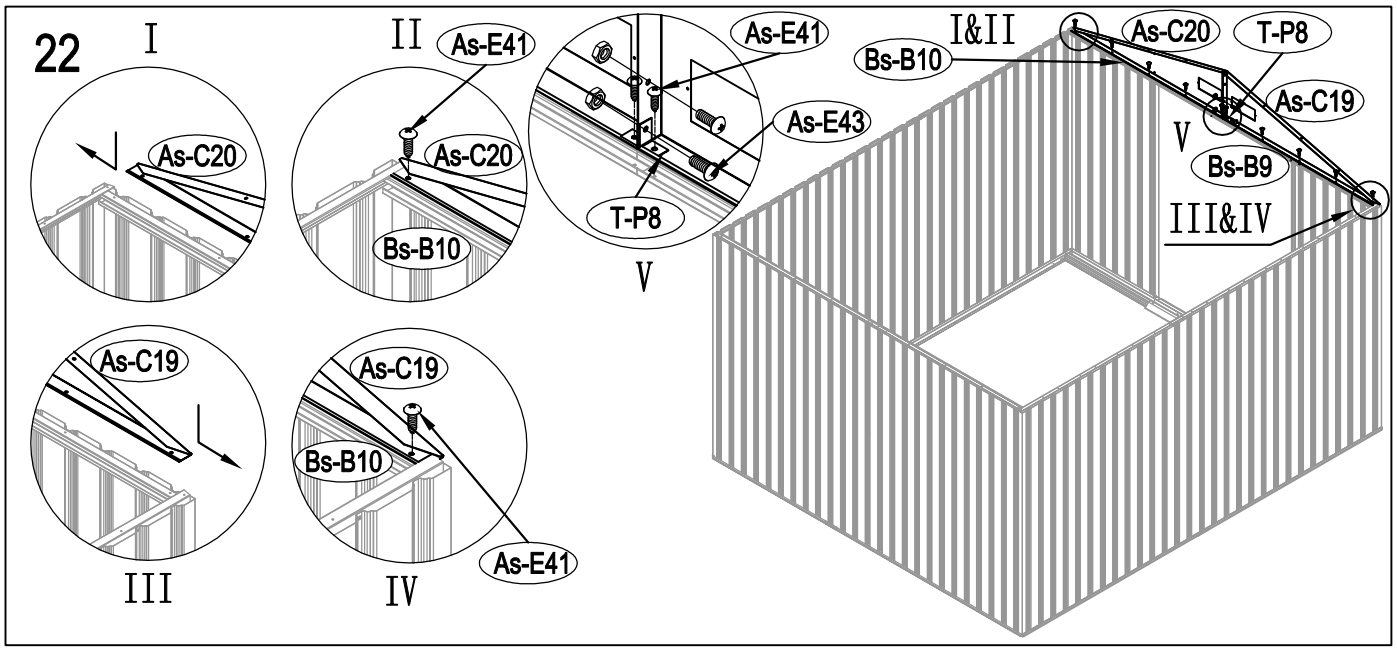
22
I
As-C20
II
As-E41
As-C20
Bs-B10
As-E41
As-E43
T-P8
V
I&II
Bs-B10
As-C20
T-P8
As-C19
V
Bs-B9
III&IV
As-C19
III
As-C19
Bs-B10
As-E41
IV

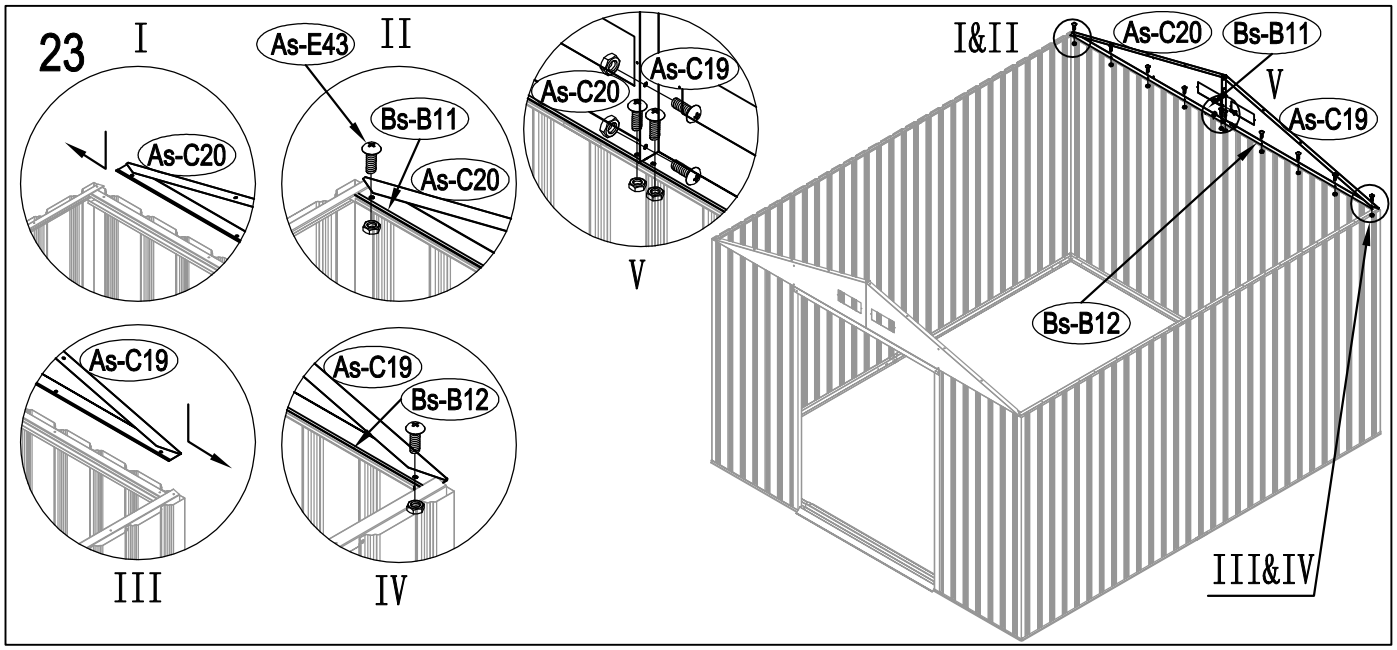
23
I
As-C20
As-E43
II
Bs-B11
As-C20
As-C19
As-C20
V
I&II
As-C20
Bs-B11
V
As-C19
Bs-B12
III&IV
As-C19
III
As-C19
Bs-B12
IV

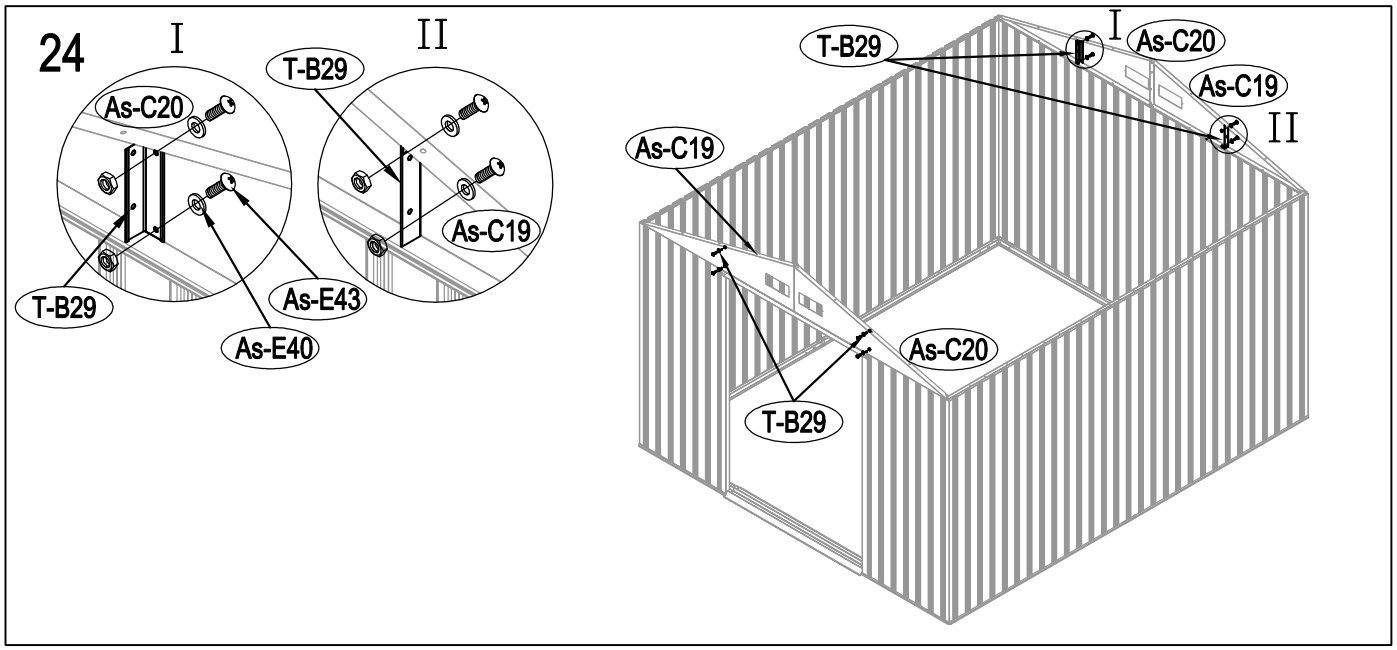
24
I
As-C20
T-B29
As-E43
As-E40
II
T-B29
As-C19
I
T-B29
As-C20
As-C19
II
As-C19
As-C20
T-B29

25

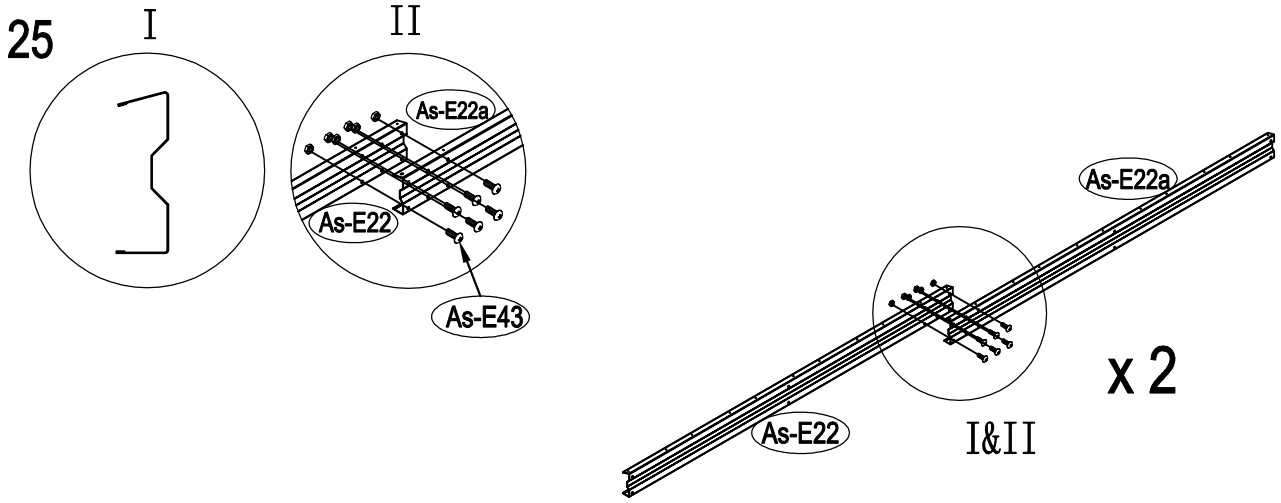
I
II
As-E22a
As-E22
As-E43
As-E22a
x 2
As-E22
I&II

26

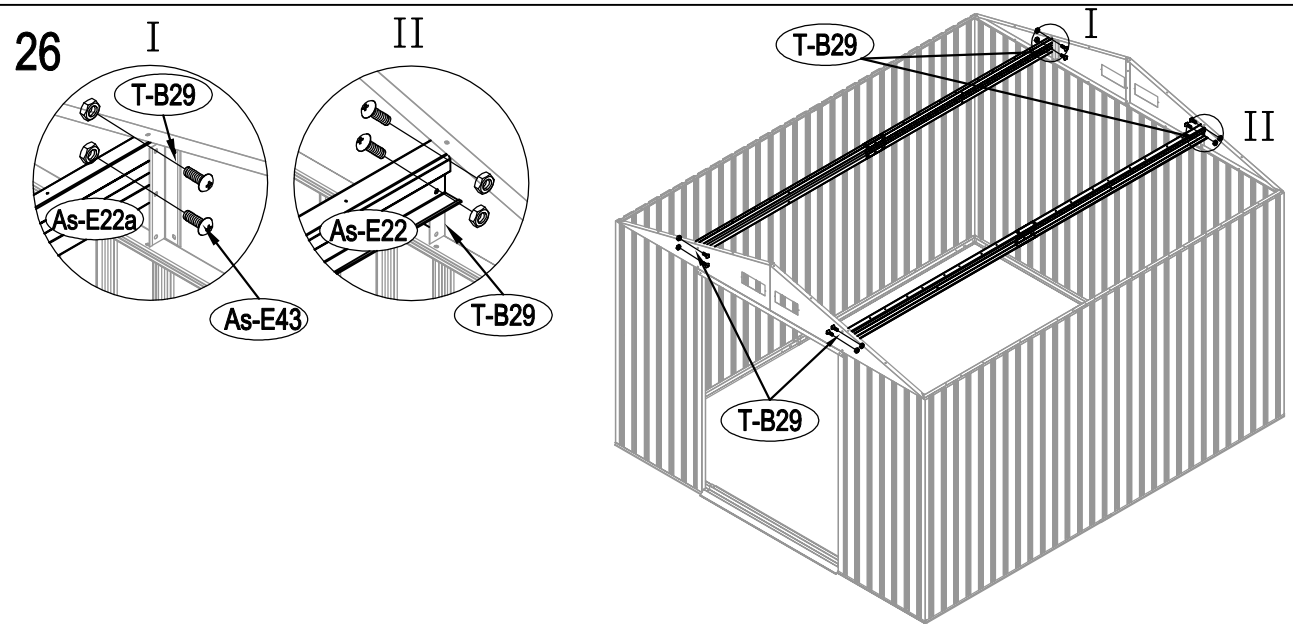
I
II
T-B29
As-E22a
As-E43
As-E22
T-B29
T-B29
I
II
T-B29

27

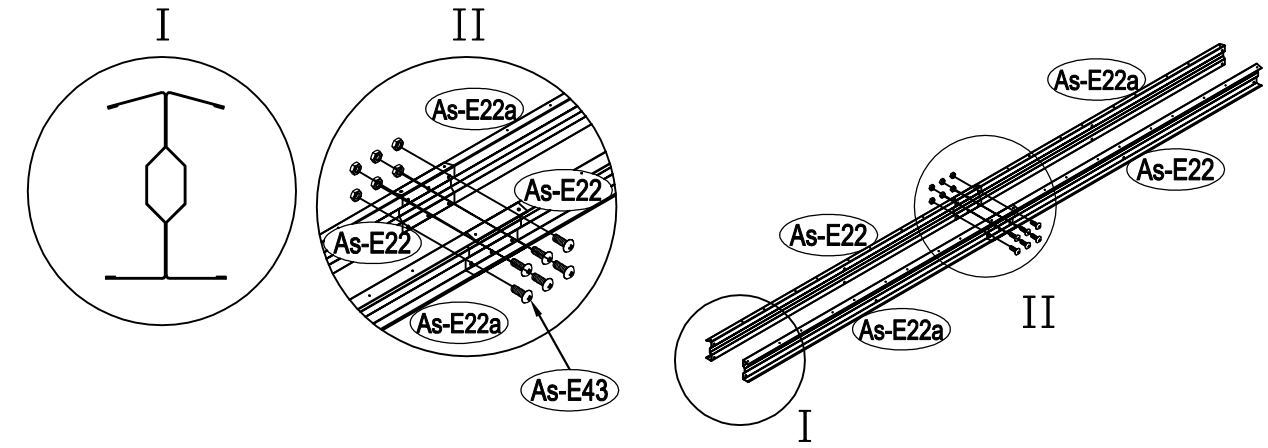
I
II
As-E22a
As-E22
As-E22
As-E22a
As-E43
As-E22a
As-E22
As-E22
As-E22a
II
I

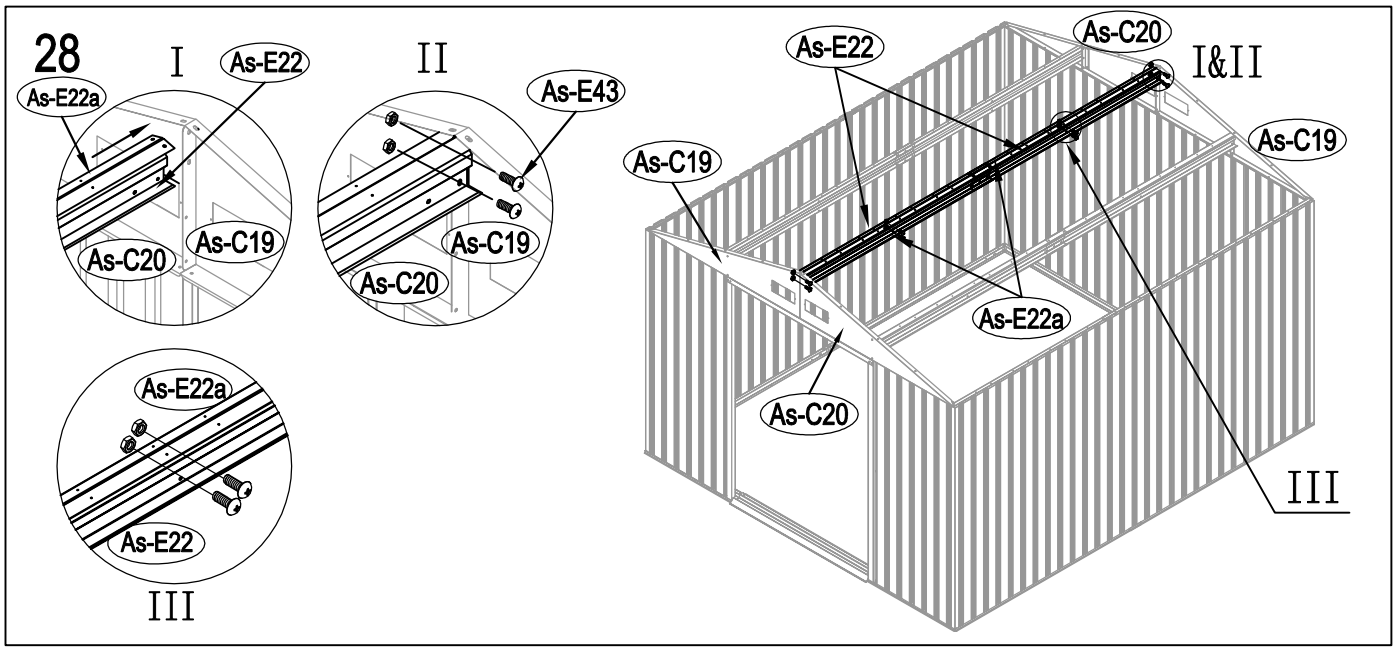
28
I
As-E22
As-E22a
As-C20
As-C19
II
As-E43
As-C19
As-C20
As-E22a
As-E22
III
As-E22
As-C20
I&II
As-C19
As-C19
As-E22a
As-C20
III

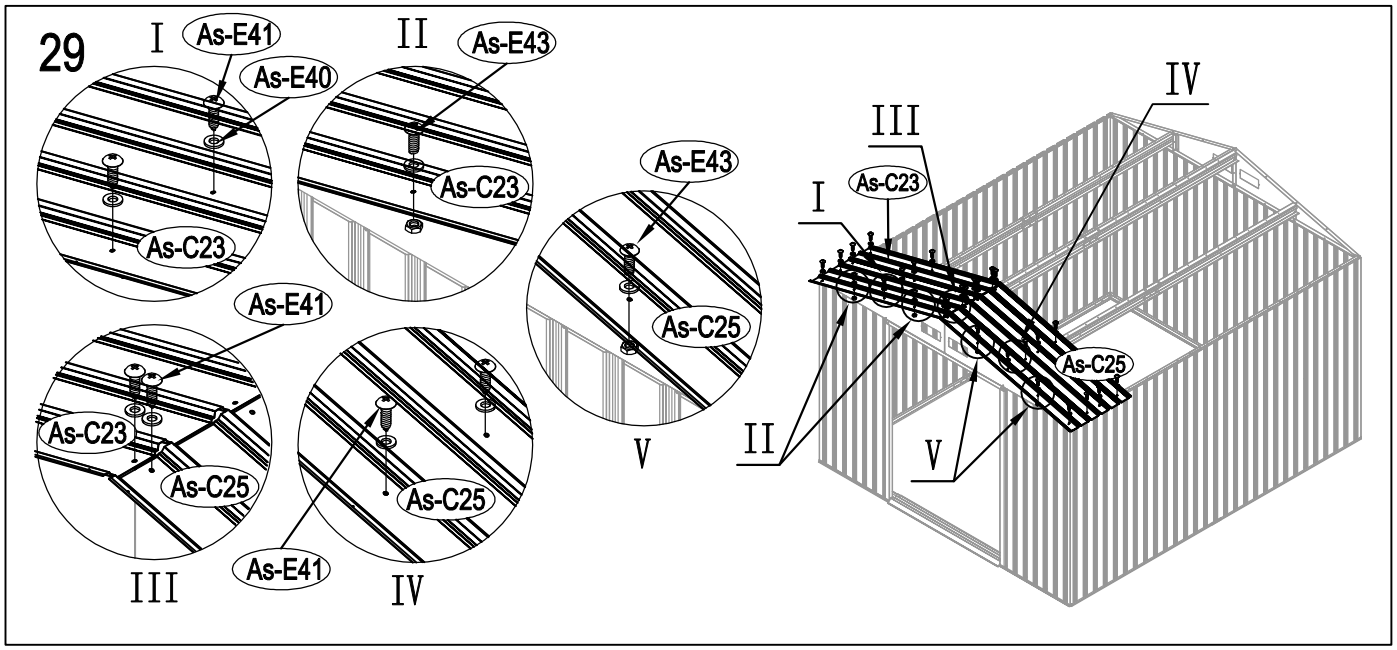
29
I
As-E41
As-E40
As-C23
II
As-E43
As-C23
As-E43
As-C25
V
As-E41
As-C23
As-C25
III
As-C25
As-E41
IV
IV
III
As-C23
I
As-C25
II
V

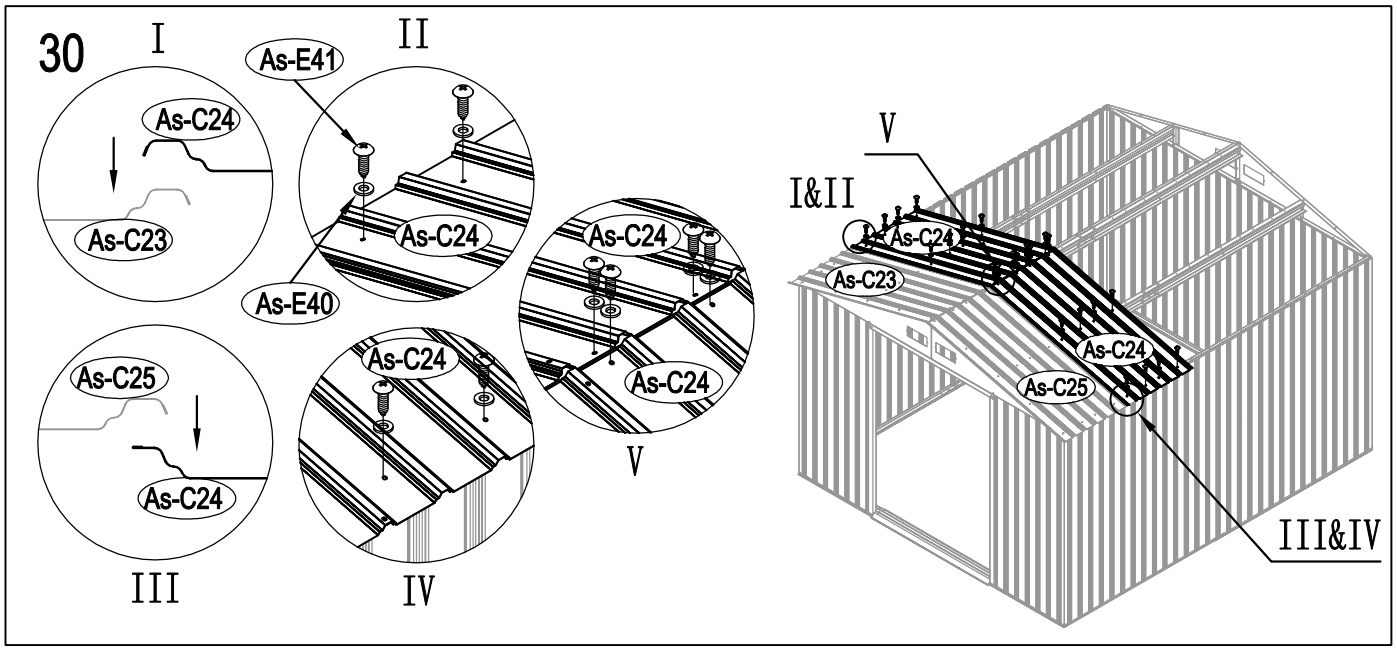
30
I
As-C24
As-C23
II
As-E41
As-C24
As-E40
As-C24
As-C24
V
As-C25
As-C24
III
As-C24
IV
V
I&II
As-C24
As-C23
As-C24
As-C25
III&IV

31

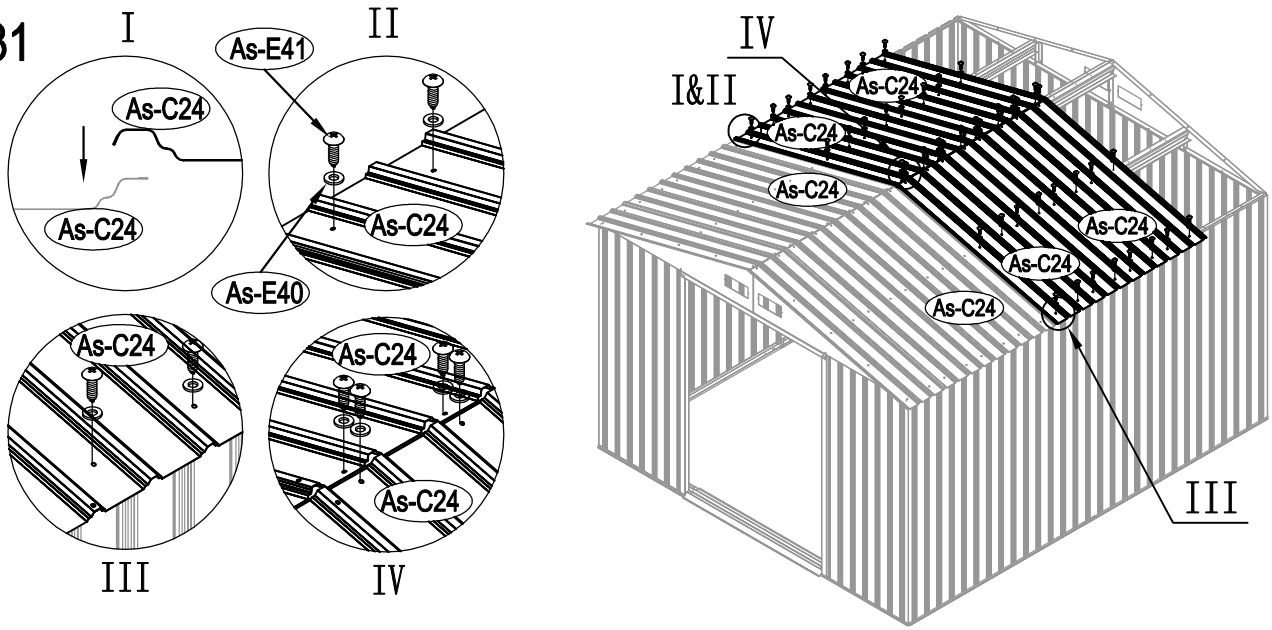
I
II
As-E41
As-C24
As-C24
As-C24
As-E40
As-C24
As-C24
As-C24
III
IV
IV
I&II
As-C24
As-C24
As-C24
As-C24
As-C24
As-C24
As-C24
III

32

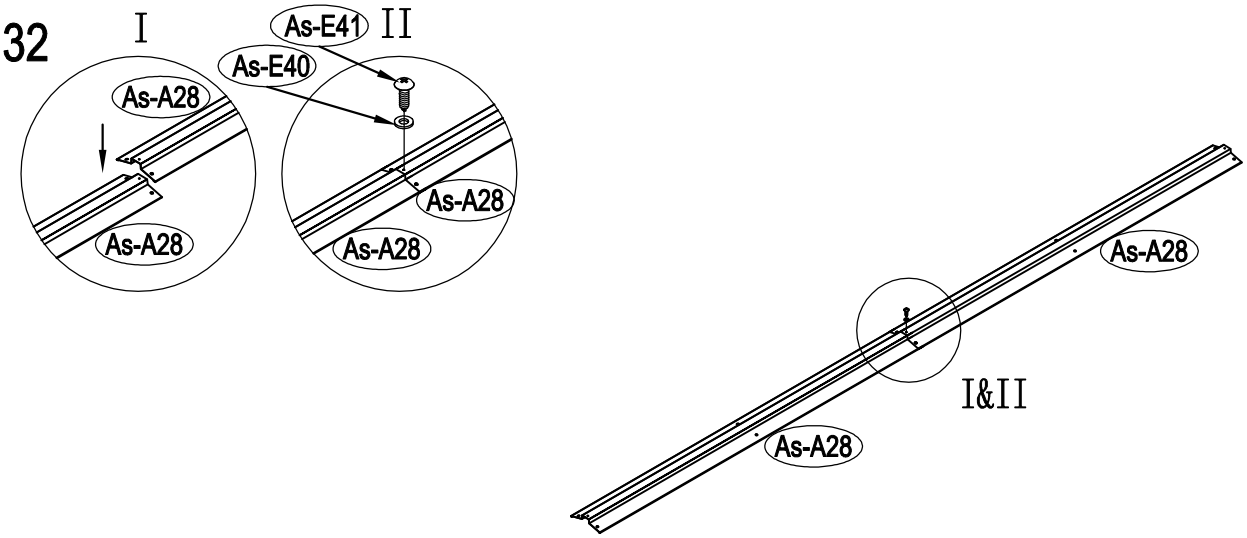
I
As-E41
II
As-E40
As-A28
As-A28
As-A28
As-A28
As-A28
As-A28
I&II
As-A28

33

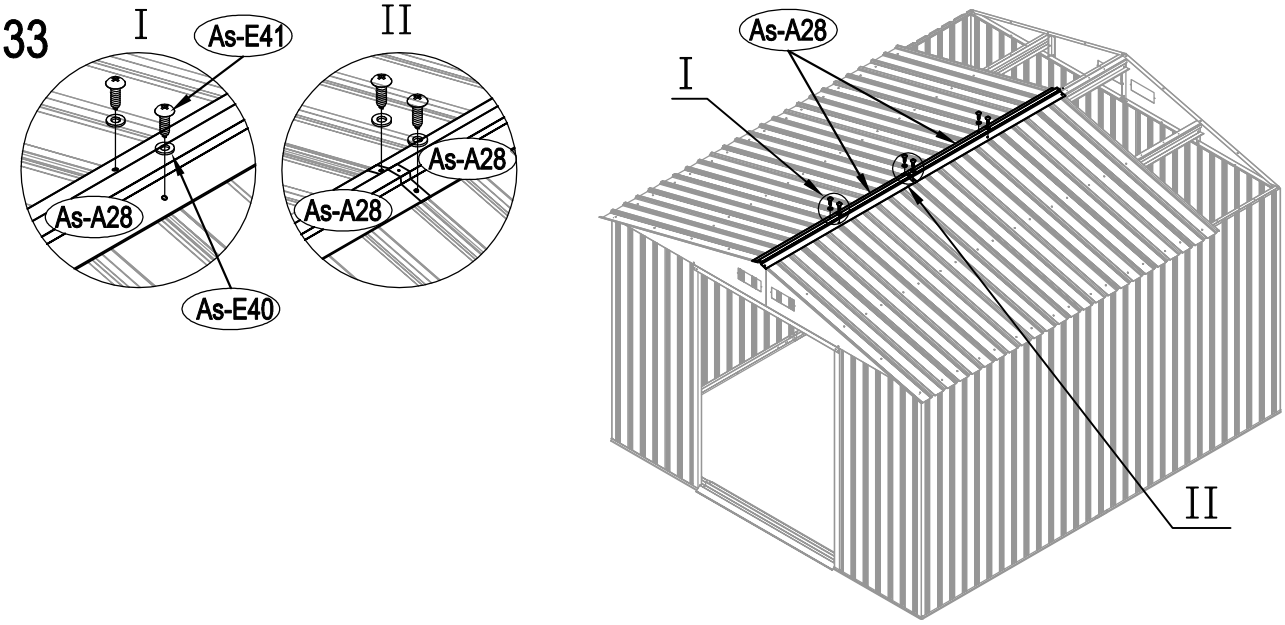
I
As-E41
II
As-A28
As-A28
As-A28
As-A28
As-E40
As-A28
I
II

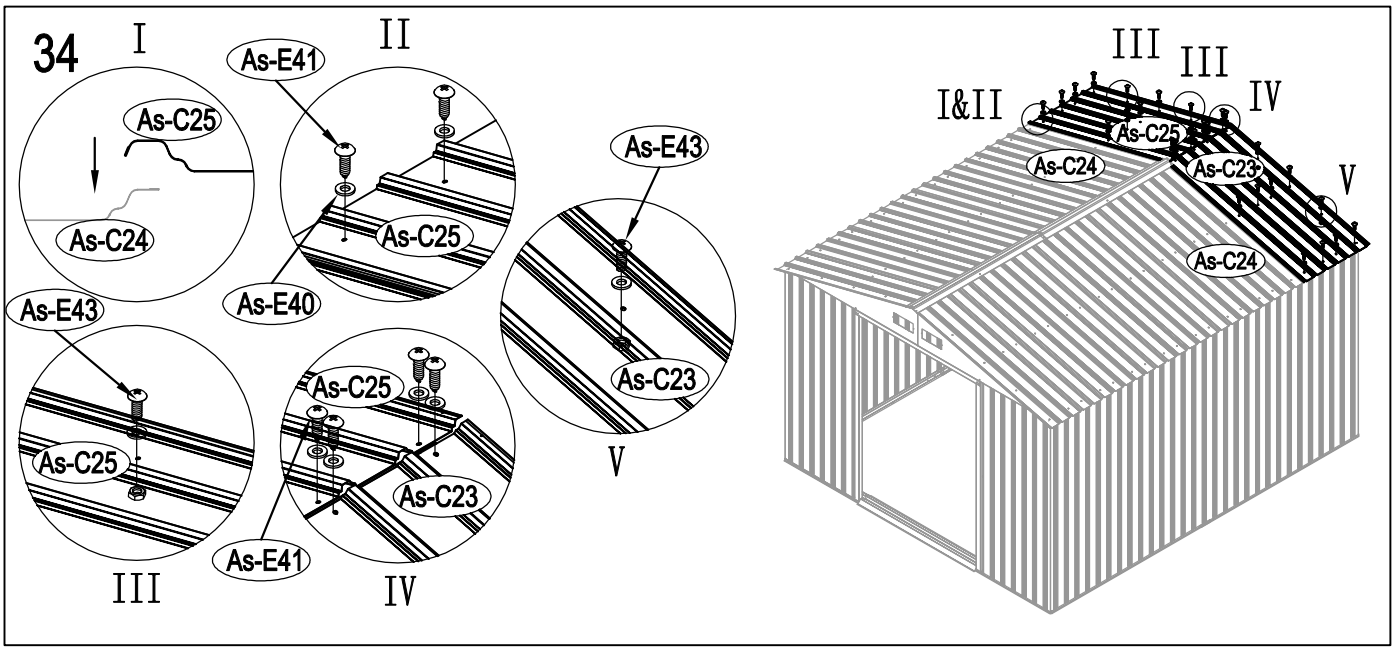
34
I
As-C25
As-C24
II
As-E41
As-C25
As-E40
As-E43
As-C23
V
As-E43
As-C25
III
As-C25
As-C23
As-E41
IV
I&II
III
III
IV
As-C25
As-C24
As-C23
V
As-C24

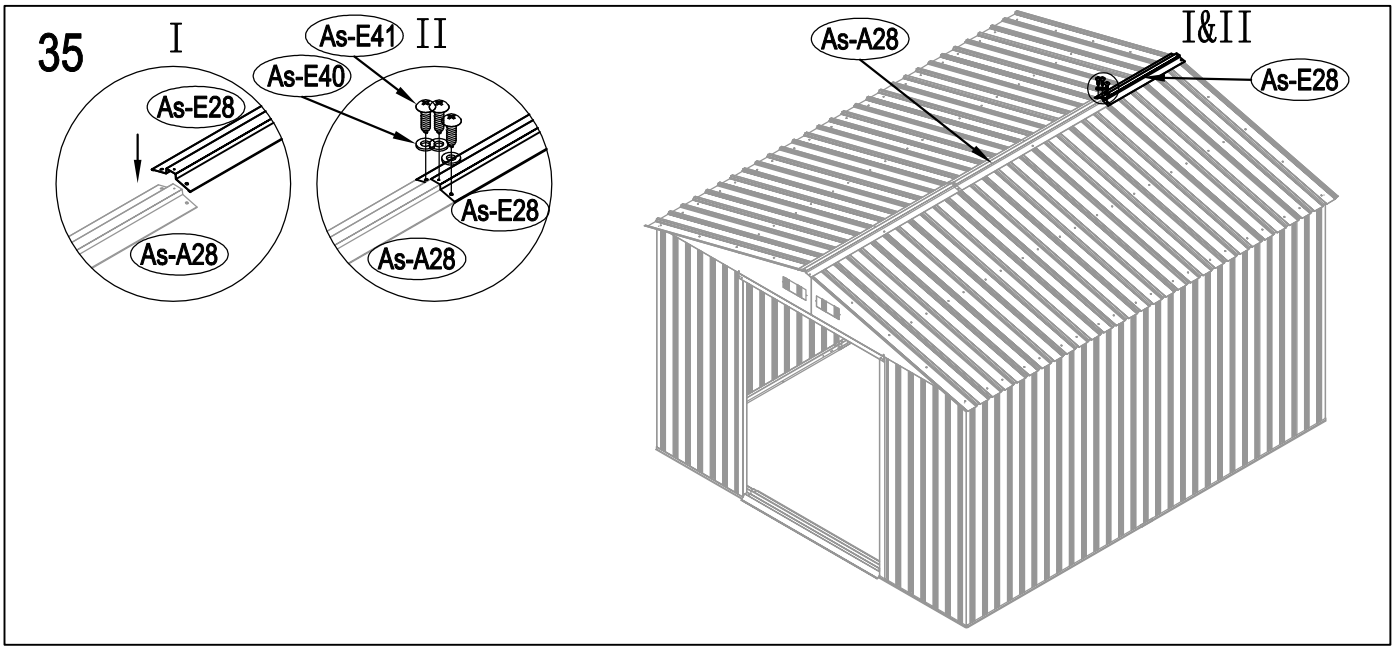
35
I
As-E28
As-A28
As-E41
II
As-E40
As-E28
As-A28
As-A28
I&II
As-E28

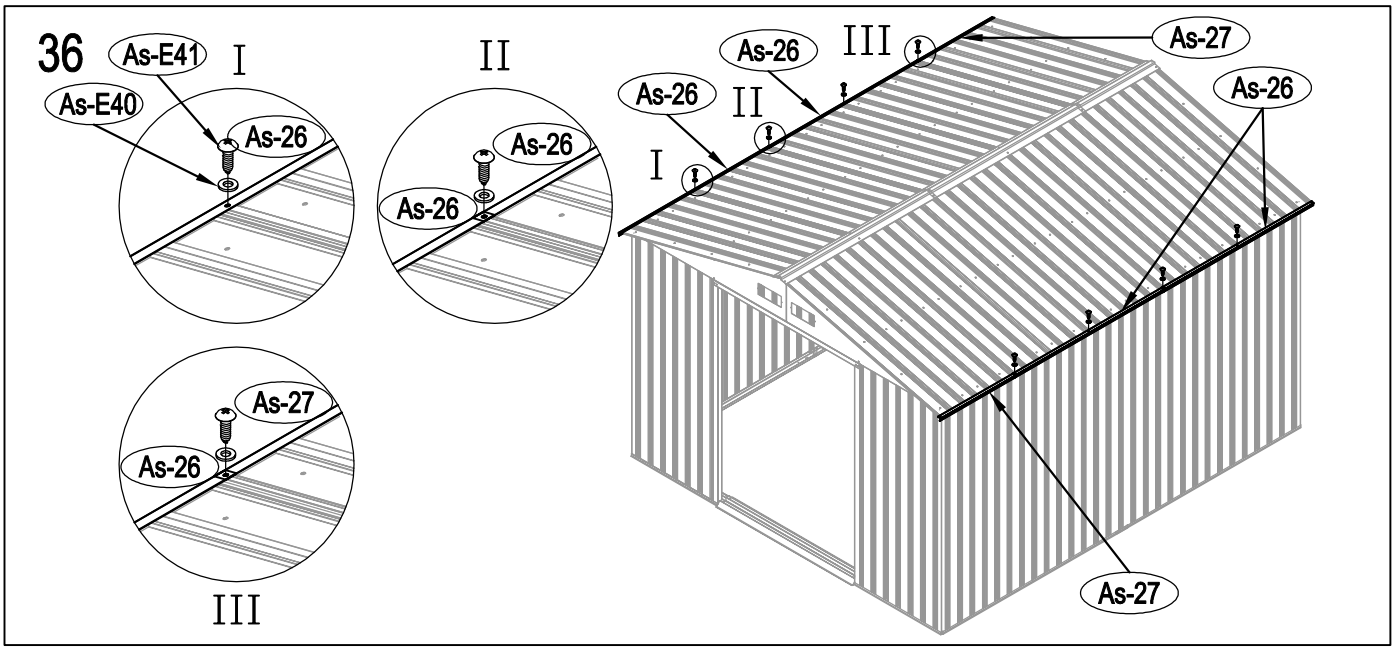
36
As-E41
I
As-E40
As-26
II
As-26
As-26
III
As-27
As-26
As-26
II
I
As-26
As-27
As-26
III
As-27

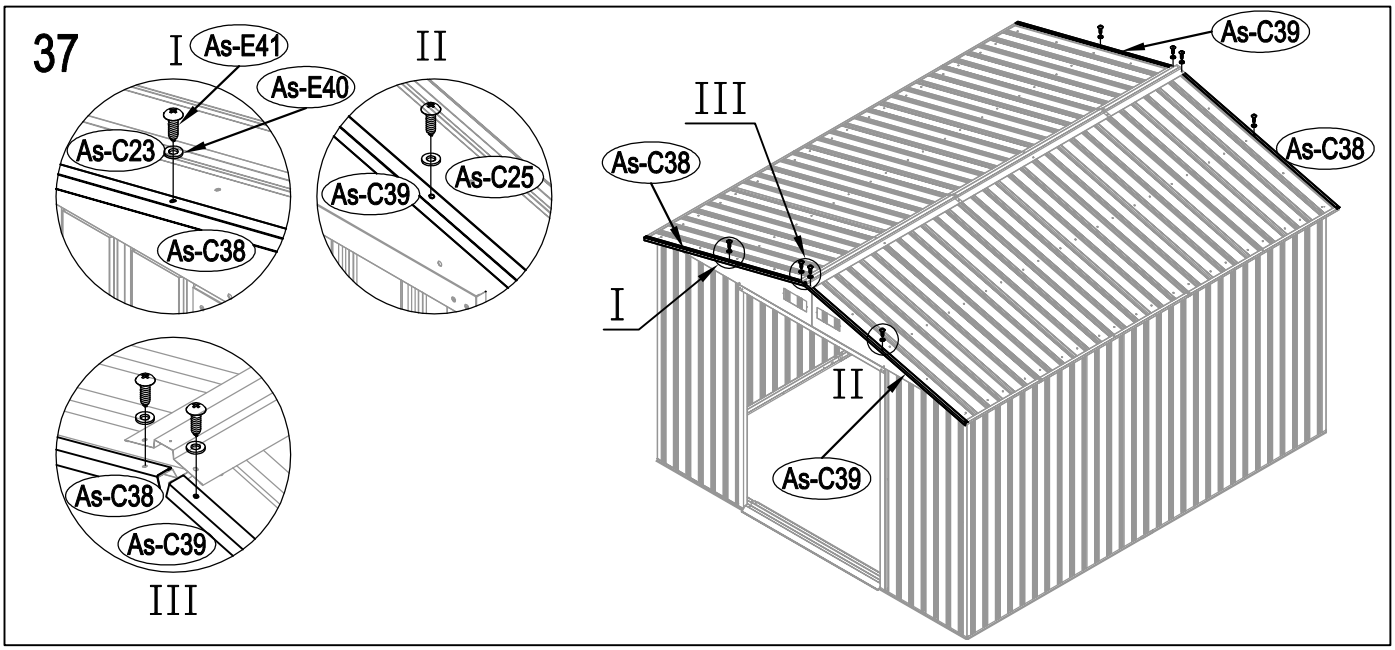
37
I
As-E41
As-E40
As-C23
As-C38
II
As-C25
As-C39
III
As-C38
As-C39
As-C39
As-C38
III
As-C38
I
II
As-C39

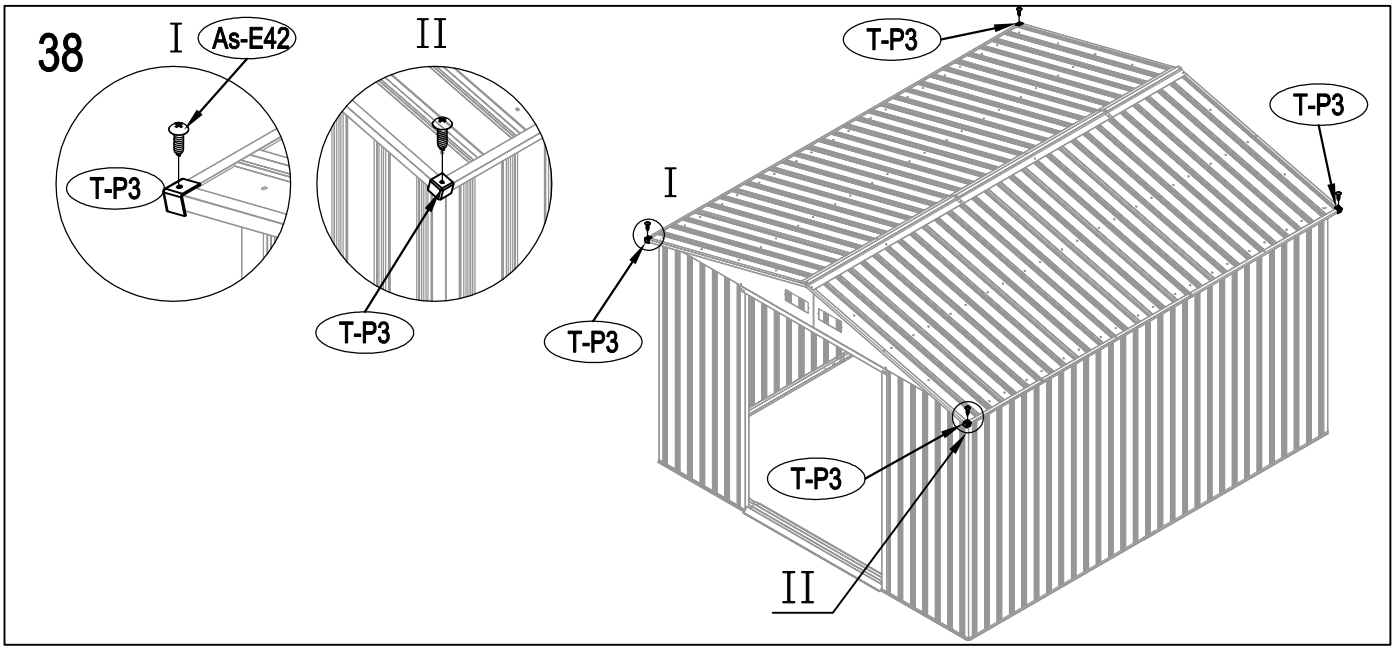
38
I
As-E42
T-P3
II
T-P3
T-P3
T-P3
I
T-P3
T-P3
II

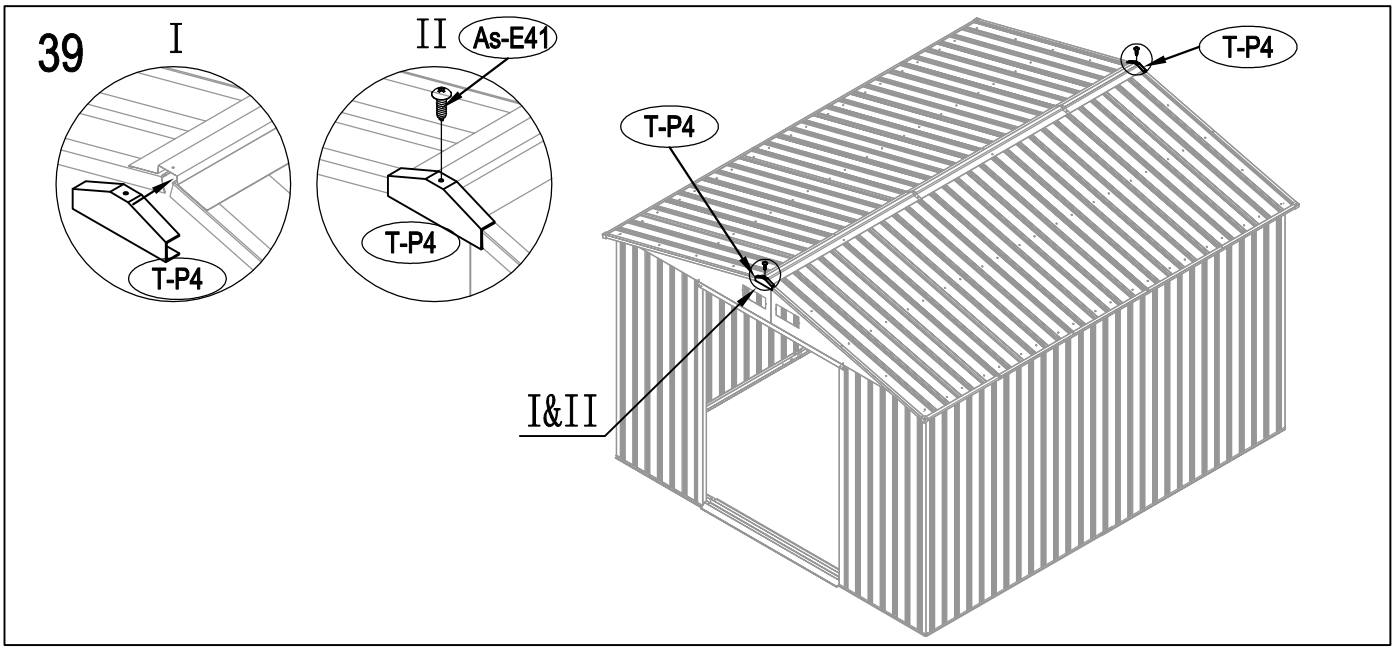
39
I
T-P4
II
As-E41
T-P4
T-P4
T-P4
I&II

40

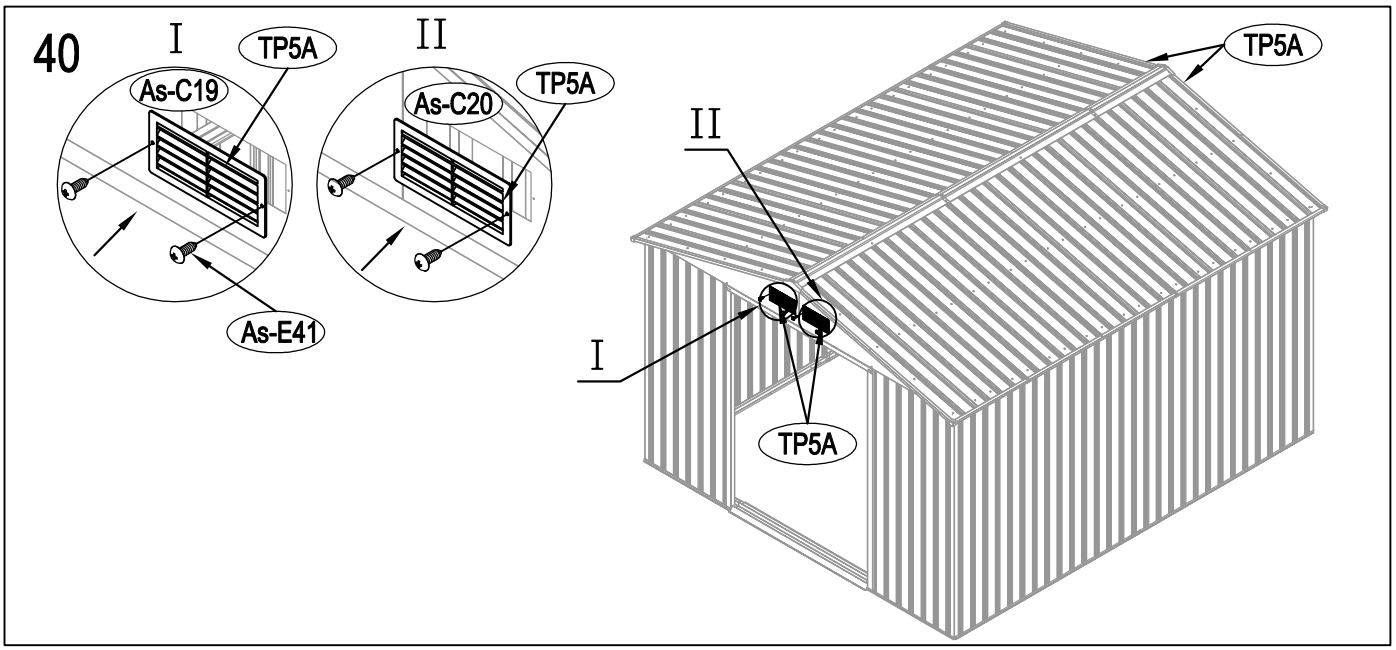
I
TP5A
As-C19
As-E41
II
As-C20
TP5A
TP5A
II
I
TP5A

41

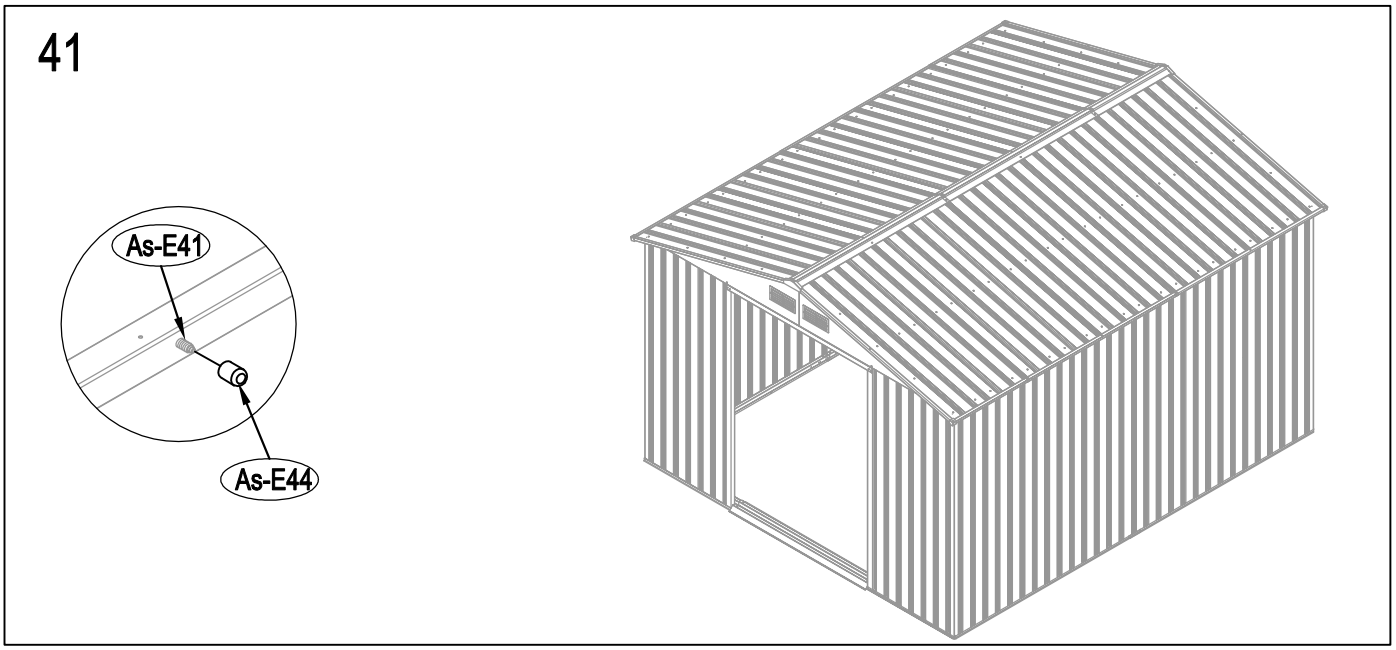
As-E41
As-E44

42

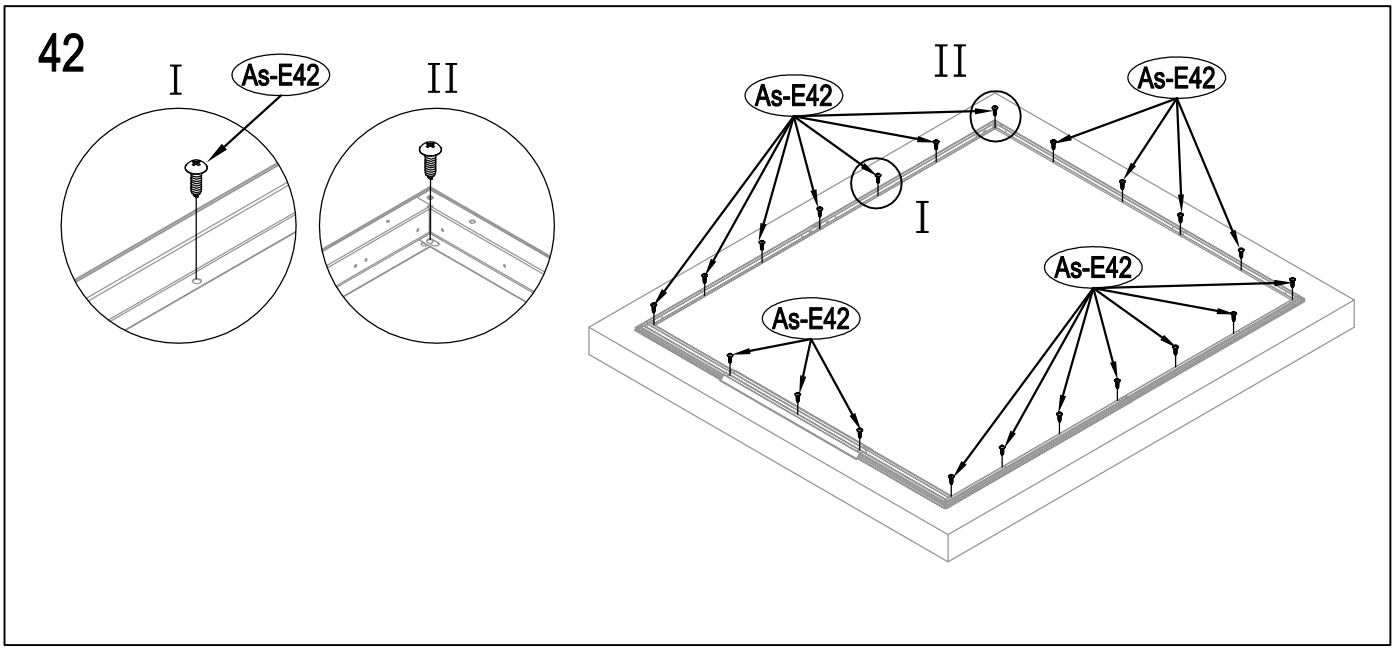
I
As-E42
II
II
As-E42
As-E42
I
As-E42
As-E42

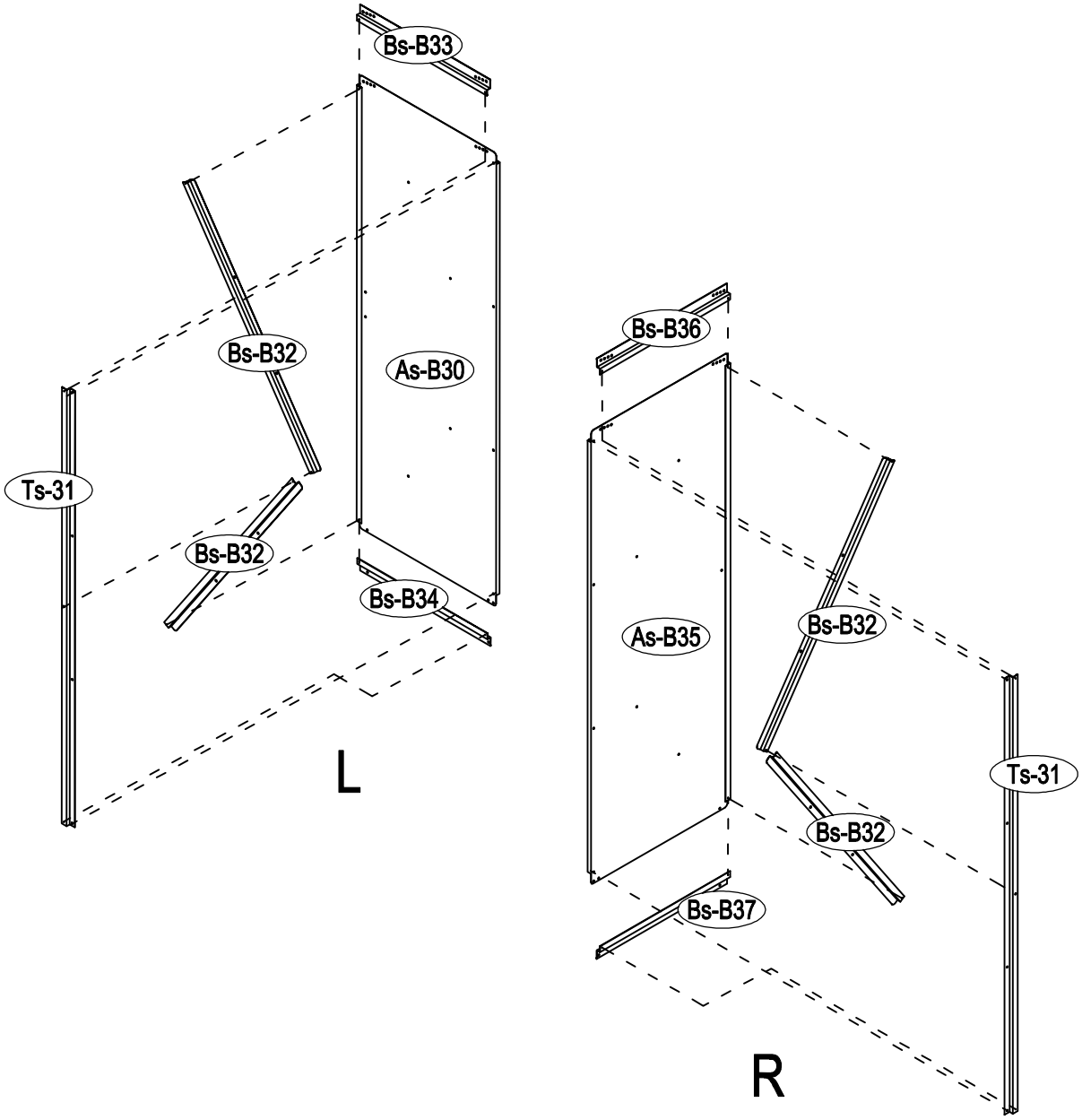
Bs-B33
Bs-B32
As-B30
Ts-31
Bs-B32
Bs-B34
L
Bs-B36
As-B35
Bs-B32
Ts-31
Bs-B32
Bs-B37
R

1

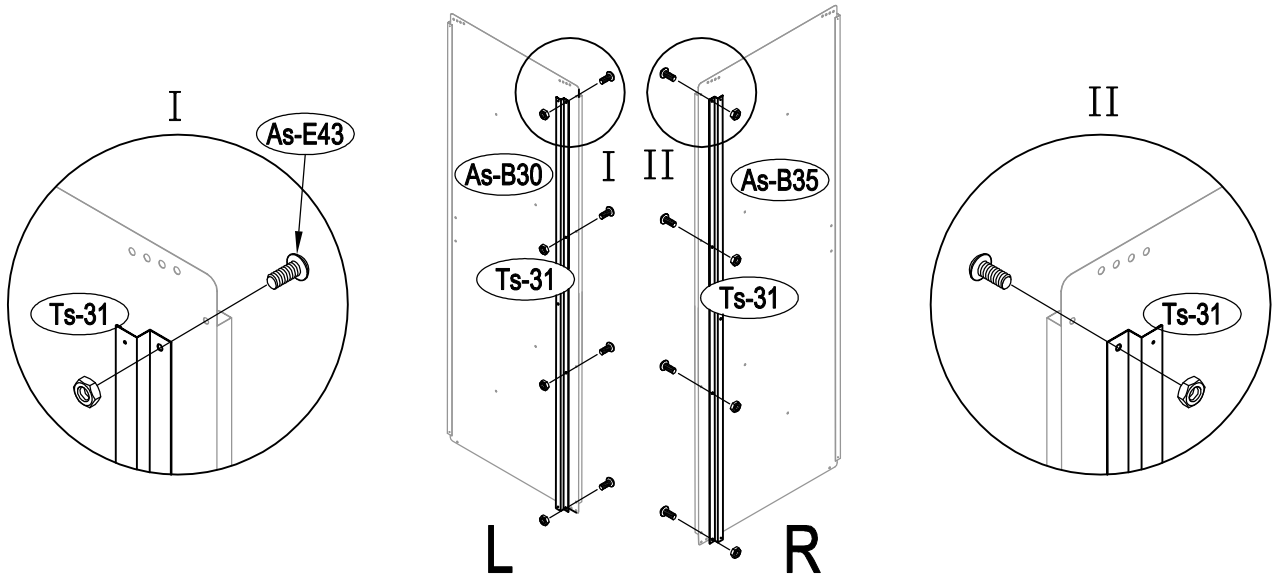
I
As-E43
Ts-31
As-B30
I
II
As-B35
Ts-31
Ts-31
II
Ts-31
L
R

2

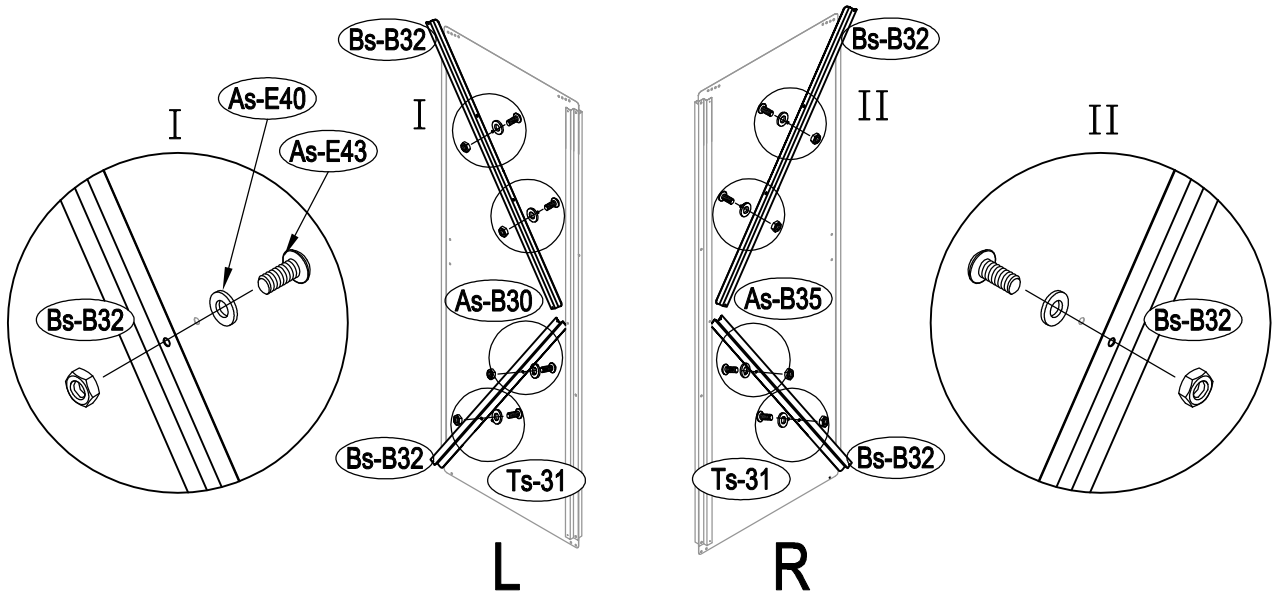
Bs-B32
I
As-E40
As-E43
Bs-B32
As-B30
Bs-B32
Ts-31
L
Bs-B32
II
As-B35
Ts-31
Bs-B32
R
II
Bs-B32

3

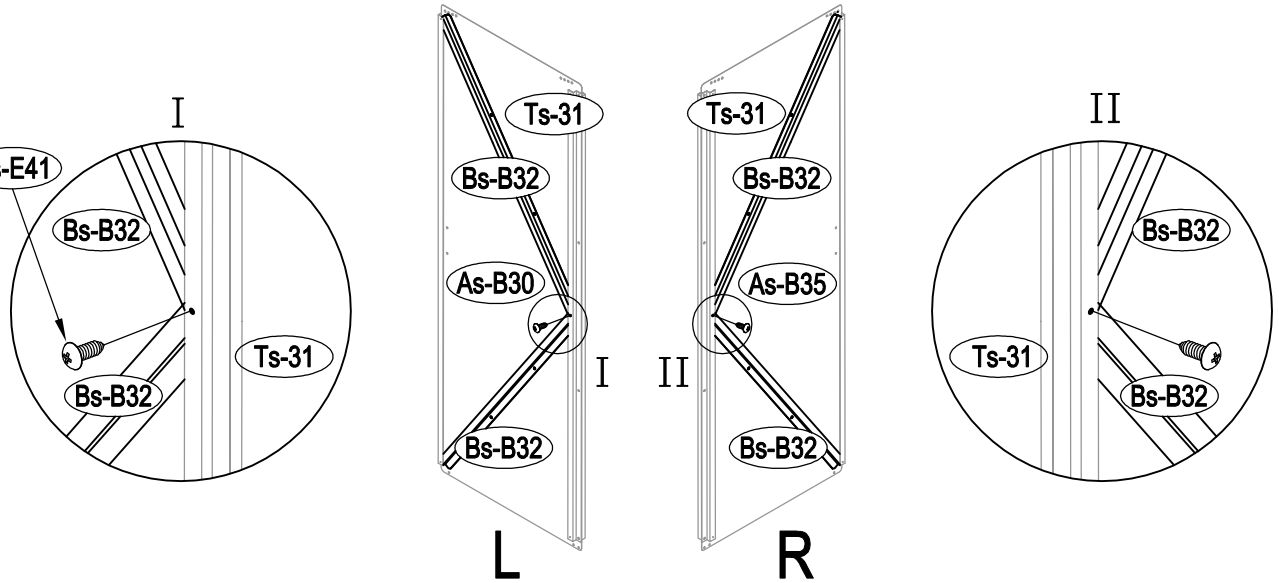
I
As-E41
Bs-B32
Ts-31
Bs-B32
Ts-31
Bs-B32
As-B30
I
Bs-B32
L
Ts-31
Bs-B32
As-B35
II
Bs-B32
R
II
Bs-B32
Ts-31
Bs-B32

4

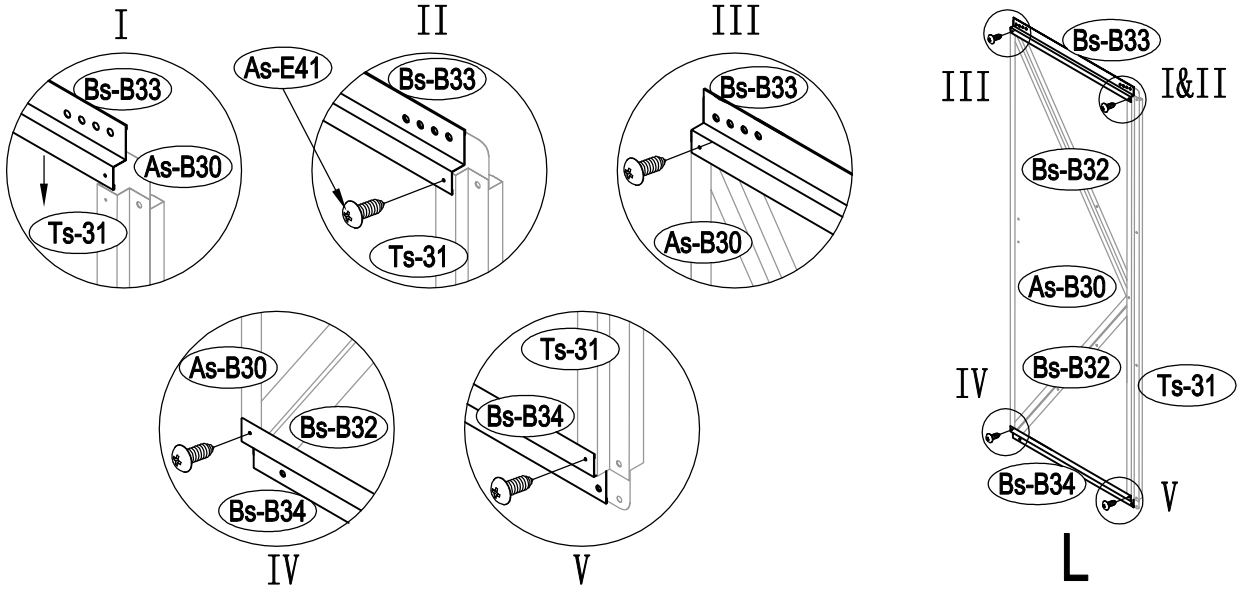
I
Bs-B33
As-B30
Ts-31
II
As-E41
Bs-B33
Ts-31
III
Bs-B33
As-B30
IV
As-B30
Bs-B32
Bs-B34
V
Ts-31
Bs-B34
Bs-B33
III
I&II
Bs-B32
As-B30
IV
Bs-B32
Ts-31
Bs-B34
V
L

5

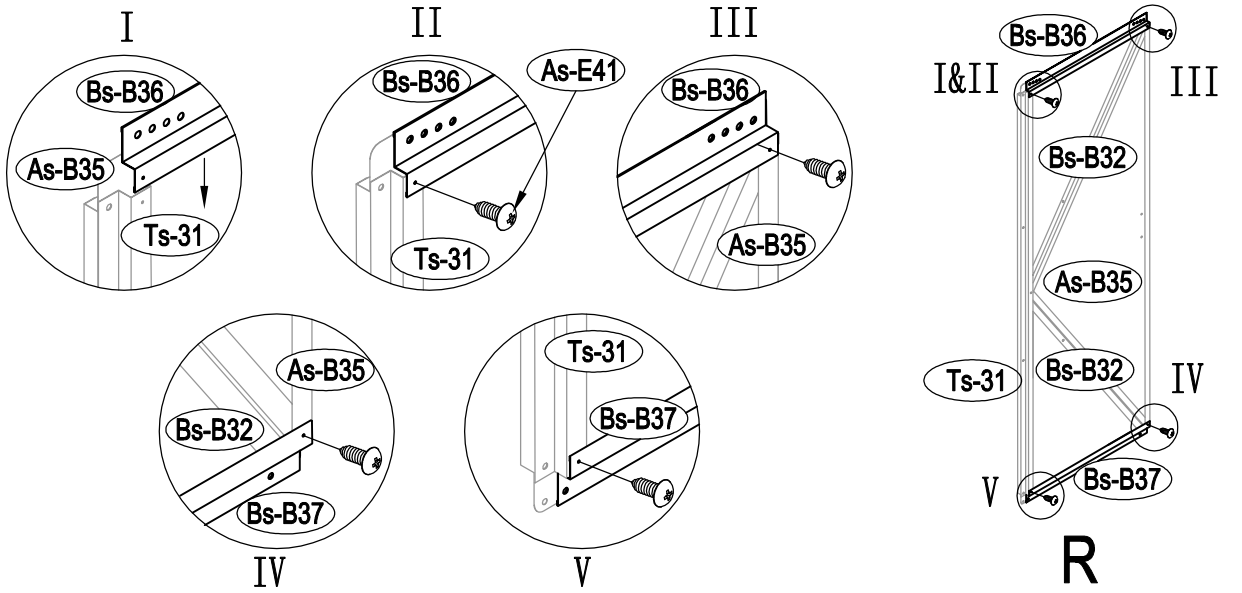
I
Bs-B36
As-B35
Ts-31
II
Bs-B36
As-E41
Ts-31
III
Bs-B36
As-B35
IV
As-B35
Bs-B32
Bs-B37
V
Ts-31
Bs-B37
Bs-B36
I&II
III
Bs-B32
As-B35
Ts-31
Bs-B32
IV
V
Bs-B37
R

6

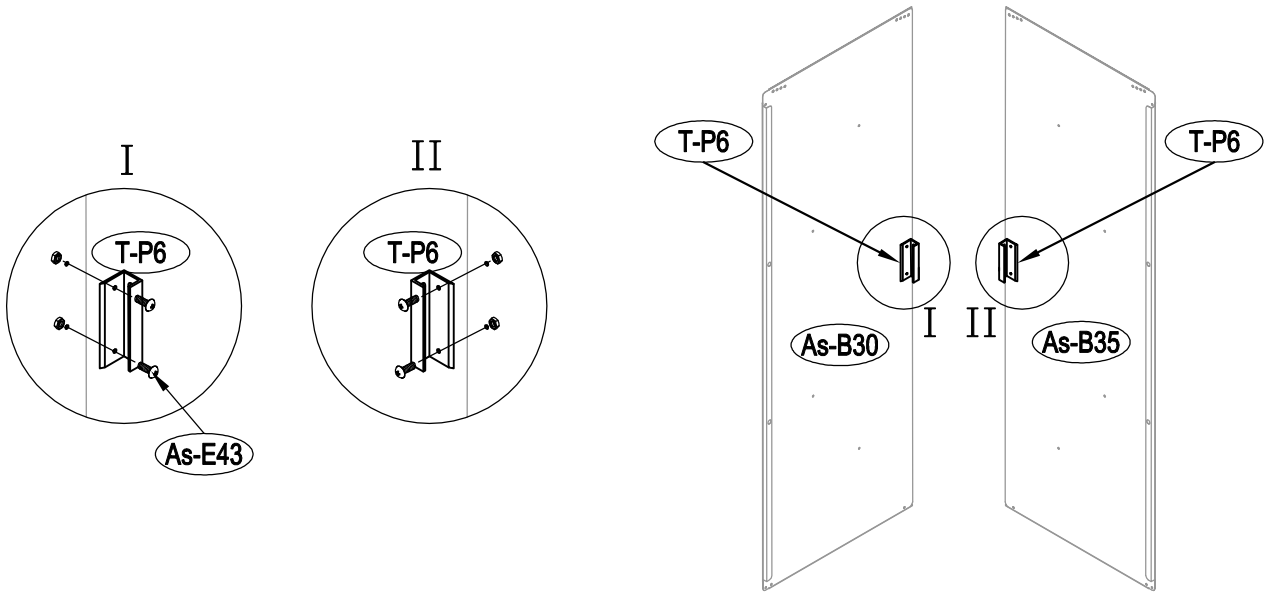
I
T-P6
As-E43
II
T-P6
T-P6
T-P6
I
II
As-B30
As-B35

7

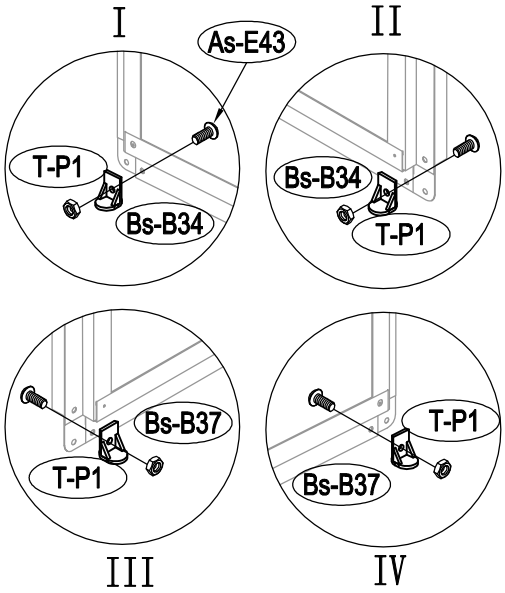
I
As-E43
T-P1
Bs-B34
II
Bs-B34
T-P1
Bs-B37
T-P1
III
T-P1
Bs-B37
IV

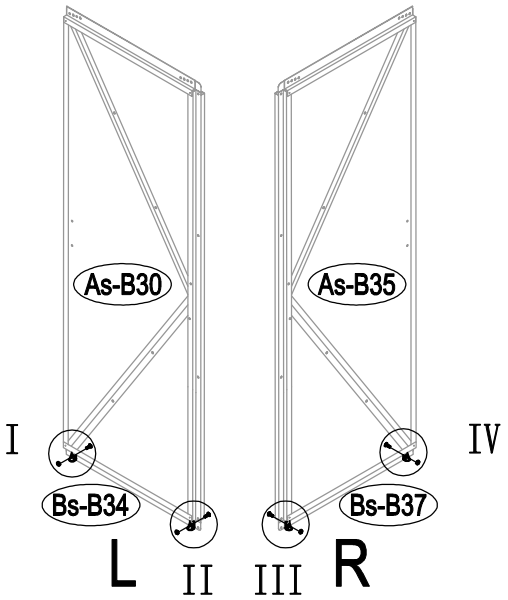
As-B30
As-B35
I
IV
Bs-B34
Bs-B37
L
II
III
R

8

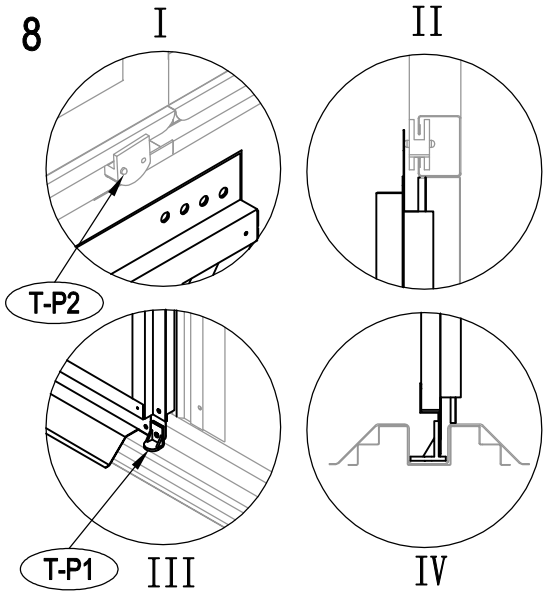
I
II
T-P2
T-P1
III
IV

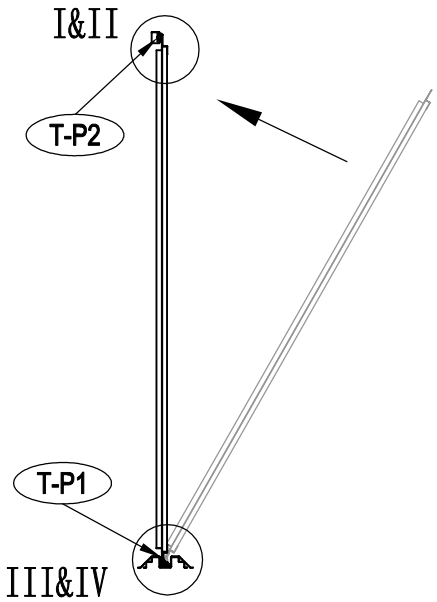
I&II
T-P2
T-P1
III&IV

9

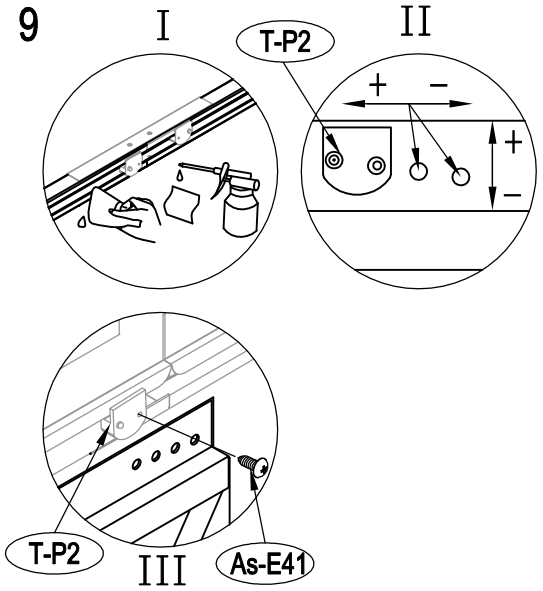
I
T-P2
II
+
−
+
−
T-P2
III
As-E41

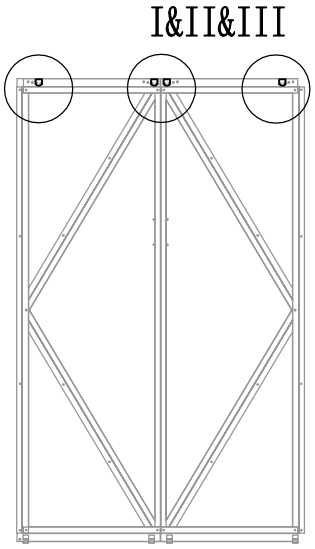
I&II&III